Revision 1.00
September 2014

Distributed by:

SEGA Amusements Europe Ltd.

Europe
Phone: +44 (0) 208 391 8090
Fax: +44 (0) 208 391 8099

United States of America
Phone: +1 (847) 364 9787
Fax: +1 (630) 860 7775
Email: sales@segaarcade.com
Web: www.segaarcade.com

E&OE (Errors & Omissions Excepted)

KEY MASTER MINI

OWNER'S MANUAL

KEY MASTER MINI

OWNER'S MANUAL

KEY MASTER MINI

Copyright © KOMUSE CO., LTD. All Rights Reserved.

IMPORTANT

- Before using this product, read this manual carefully to understand the contents herein stated.
- After reading this manual, be sure to keep it near the product or in a convenient place for easy reference when necessary.

**Image used for illustration purposes only and may differ from actual product.*

PRECAUTIONS BEFORE USE

The following safety precautions are given throughout this manual. They must be strictly followed to protect those who install, use or maintain this product as well as to protect players, visitors and property.

For safety reasons.
The following suggestions should be adhered to:

⚠ WARNING
Disregarding could result in serious injury.

⚠ CAUTION
Disregarding could result in injury or product damage.

The following graphic suggestions describe the types of precautions to be followed.

⚠
Indicates that care should be taken.

Indicates a matter which must be performend.

⃠
Forbidden.

Certain procedures require a qualified in-shop maintenance person or industry specialist. For such instructions, a qualified person must take care of the jobs.

- Otherwise an electric shock, machine trouble, or a serious accident may result.
- Replacing the machine parts, inspecting and maintaining the machines, and troubleshooting must be assigned only to a qualified in-shop maintenance person or industry specialist. This booklet gives instructions that hazardous jobs in particular must be handled by an industry specialist. Qualified in-shop maintenance person and industry specialist are defined as follows.

Qualified in-shop maintenance person
- A service staff shall have experience in operations of game machines. The staff shall be responsible for assembly, installation, inspection and maintenance of the machine.

Industry specialist
- An industry specialist must be engaged in designing, manufacturing, inspecting and servicing amusement machines. He or she must have an education in electrical, electronic and mechanical engineering, and routinely maintain and repair amusement machines.

♣ PRECAUTIONS FOR USE

⚠ WARNING

Be sure to consult an industry specialist when setting up, moving or transporting this product

- This product should not be set up, moved or transported by any one dther than an industry specialist.
- When installing this product, set the 4 leg levelers evenly on the floor and make sure that the product is installed stably in injury or accident
- When installing this product, do not apply undue force on movable parts. Otherwise, injury and accident may result,or the product may be damaged.

This machine is for indoor use only. Do not install outside. ⊘

Do not place the machine near emergency exits. ⊘

Protect the machine from: ⊘
Rain or moisture.

Direct sunlight

Direct heat from air-conditioning and heating equipment, etc.

Hazardous flamable substances.

failure to observe these warnings may result in injury, accidental damage or malfunction.

Do not place containers holding chemicals or water on or near the machine. ⊘

Do not place object near the ventilating holes. ⊘

Do not bend the power cord or place heavy objects upon it. ⊘

Never connect or disconnect the power cord with wet hands. ⊘

Never remove the power by pulling the power cord, always use the power sw. ⊘

♣ PRECAUTIONS FOR USE

⚠ CAUTION

Be sure to use indoor wiring within the speified voltage requirements. It is not recommended to use extension cables. If for some reason an extension cable must be used then please ensure that the rating of the extension cable matches that of the machine specifications or greater. Never use a multi-connection extension cable.

Be sure to use the attached power cord.

Do not lay the power cord where people walk through.

Be sure to gound this product.

Do not exert excessive force when moving the machine.

For proper ventilation, keep the machine at least 100mm (4") away from the walls.

Do not alter the system related dipswitch settings.

♣ PRECAUTIONS FOR USE

⚠ CAUTION

If there is any abnormality such as smoke, bad smell or abnormal noise being emitted from the machine, immediately turn OFF the main power switch and unplug the power cord.

- Using the machine in abnormal conditions may result in a fire hazard or accidents.

In case of abnormality

1. Turn OFF the main power switch.
2. Unplug the power cord from the machine.
3. Contact your nearest dealer.

Do not leave the power cord plugged in incorrectly or covered with dust.

Do not plug or unplug the power cord with wet hand.

In handling the power cord, follow the instructions below.

- Do not damage the power cord.
- Do not bend the power cord.
- Do not heat the power cord.
- Do not bind the power cord.
- Do not sandwich the power cord.
- Do not modify the power cord.
- Do not twist the power cord.
- Do not pull the power cord.
- Do not stand on the power cord.
- Do not drive a nail into the power cord.

If the power cord or power plug becomes damaged, stop using the machine immediately and ask you nearest dealer to replace the parts.

♣ PRECAUTIONS FOR USE

⚠ CAUTION

Do not use this machine anywhere other that industrial areas.

- Using in a residential area or an area next to a residential area could affect signal reception of radios, television sets, telephones, etc.

When opening or closing the glass door, always hold the glass with one hand and move the door gently. If the glass door is opened or closed carelessly, your hand or fingers may get trapped or pinched or the glass may smash.

When moving the machine, do not push the glass section. Tempered glass is used but it can still smash if pressed hard. If the glass smashes, personal injury can occur to the player or bystanders.

For safety reasons, do not allow any of the following people to play the game.

- Those who have high blood pressure or heart problem.
- Those who are intoxicated or under the influence of drugs.
- Pregnant women.
- Those who are not in good health.
- Thiose who have experienced muscle convulsions or loss of consciousness when playing video games, etc.
- Even players who have never been adversely affected by light stimulus might experience dizziness or headache depending on their physical condition when playing the game.
- Those who have neck or spinal cord problems.

To avoid injury from falls and electric shock due to spilled drinks, instruct the player not to place items such as drinks on the machine.

To avoid electric shocks and short circuits, do not allow customers to put hands, fingers or extraneous matter into the openings of the machine or small opening in our around the doors.

To avoid falls and resulting injury, immediately stop the customer from leaning against or climbing upon the machine.

Instruct gardians of small children to keep an eye on their children at all times.

Children cannot sense danger. Allowing small children to get near a player who is playing the game may result in the child being bumped, stuck or knocked.

♣ PRECAUTIONS FOR USE

⚠ WARNING

Be sure to turn OFF the main power switch and unplug the power cord from the product before inspecting or cleaning the machine.

When replacing parts, be sure to use parts of the correct specification. Never use parts other than those specified.

Opening inside the machine shall be done by a machine specialist or engineer qualified to do so as high current and voltages are present inside.

If the sub power switch of the service panel is turned OFF without turning OFF the main power switch of the power supply unit, some parts in the units remain live. When opening the back door, be sure to turn OFF the main power switch and unplug the power cord from the receptacle.

Strictly refrain from disassembly and repair of parts which are not indicated in this manual, as well as settings and remodeling.

To clean the game machine, wipe it with a soft cloth dampened in a neutral detergent.

- Using thinner of other organic solvent or alcohol may decompose the material.
- Electrical shock or equipment failure could be caused by water entering the inside of the machine.

⚠ CAUTION

Components in the game are sensitive to vibrations and impact. Care should be used when moving and transporting the game machine. Be sure not to let the machine tip over.

Before moving the machine, be sure to turn OFF the main power switch, unplug the power cord from the receptacle and remove the power cord form the machine.

Before moving take the machine, off the levelers and move it on the casters.

Avoid excessive force while moving the machine.

- When setting up, inspecting, maintaining, moving or transporting this product, follow the procedures and instructions set forth in this manual and perform such work safely.
- Do not set up, handle, inspect, maintain, move or transport this product under conditions equivalent to the condition of “WARNING” or “CAUTION” specified in this manual.
- If a new owner is to have this product as a result oftransfer, etc., be sure to give this manual to the new owner.

OPERATOR NOTICE

This prize offering game device has many settings and operator options to accommodate various marketing concepts, a wide range of prizes, and use in International Territories and throughout the United States.

In the US individual state statutes and local jurisdiction codes can impact payment required amusement themed and designed games offering prizes, including the type and value of the prizes. Further the degree of skill requirements vary. Not all settings and options are suitable for every jurisdiction.

Your Responsibility as an Operator

- It is solely your responsibility as the operator of the game to fully comply with laws, regulations and prize value and type limitations in the jurisdiction where you place and offer this game to the public. (Contact your legal adviser).
- SKILL CONSIDERATIONS: Generally the greater the degree of control that players have as to the movements of the retrieval tool the more likely that the element of "skill" will be present. This infers that the prizes offered are retrievable at any point in time when the skill requirement is achieved in accord with posted rules of play.
- Test at each service that all player controls and the machinery work and track smoothly and time and rules display are fully visible and working.
- If the machine is ever moved or violently bumped or tilted then it is recommended that the machine is re-calibrated.
- Good maintenance and cleaning of the game and cabinetry is good business and enhances your sales. A poorly maintained machine may not continue to work in the way in which it was designed.
- Tips and notices to players should be posted behind a protective cover or glass and easily viewed from the player's position.
- Do not alter the machine's CPU board, circuitry, components, or change the EPROM software without the manufacturer's authorization. Doing so can result in criminal or civil liabilities, and void your factory warranty.
- Do not alter or modify this machine in any shape or form other than that described in the manual. Doing so can result in criminal or civil liabilities, and void your factory warranty.
- Neither manufacturer nor the distributor is responsible for any losses of prizes from this machine. It is the responsibility of the operator to set up that machine in accordance with the manual and maintain a level of security around the machine adequate for the level of prizes contained therein.

If you have questions or need technical assistance call the manufacturer or your authorized distributor for guidance.

Definition of 'Site Maintenance Personnel or Other Qualified Individuals

⚠ WARNING

Servicing and maintenance work of the contents herein stated should be performed by the SERVICEMAN stipulated as per IEC Standard. Those who do not have technical expertise and knowledge other than the SERVICEMAN are not allowed to perform the work herein stated. Executing aforementioned work by such non-technical personnel can cause serious accidents that may endanger life.

Parts replacement, maintenance inspections and troubleshooting should be carried out by site maintenance personnel or other qualified professionals. This manual includes directions for potentially dangerous procedures which should only be carried out by professionals with the appropriate specialised knowledge.

The site maintenance personnel or other qualified professionals mentioned in this manual are defined as follows:

Site maintenance personnel:
Individuals with experience in maintaining amusement equipment, vending machines, etc., working under the supervision of the owner/operator of this product to maintain machines within amusement facilities or similar premises by carrying out everyday procedures such as assembly, maintenance inspections, and replacement of units/expendable parts.

Activities to be carried out by site maintenance personnel:
Amusement equipment/vending machine assembly, maintenance inspection and replacement of units/expendable parts.

Other qualified professionals:
Persons employed by amusement equipment manufacturers, or involved in design, production, testing or maintenance of amusement equipment. The individual should have either graduated from technical school or hold similar qualifications in electrical/electronics/mechanical engineering.

Activities to be carried out by other qualified professionals:
Amusement equipment/vending machine assembly, repair/adjustment of electrical/electronic/mechanical parts.

Waste of Electrical and Electronic Equipment (WEEE) Statement.

The WEEE (Waste of Electrical and Electronic Equipment) directive places an obligation on all EU based manufacturers and importers of Electrical and Electronic Equipment to take back products at the end of their useful life. Sega Amusements Europe Ltd accepts its responsibility to finance the cost of treatment and recovery of redundant WEEE in the United Kingdom in accordance with the specified WEEE recycling requirements.

The symbol shown below will be on all products manufactured from 13th August 2005, which indicates this product must NOT be disposed of with other normal waste. Instead, it is the user's responsibility to dispose of their waste equipment by arranging to return it to a designated UK collection point for the correct recycling of waste electrical and electronic equipment.

For more information about where you can send your waste equipment for recycling contact your local authority office.

For non-UK users contact your local authority office for information on the recycling of Waste Electrical and Electronic Equipment.

Battery Recycling Statement.

The EC Directive on Batteries and Accumulators (2006/66/EC) aims to minimise the impact of batteries on the environment and encourage the recovery of the materials they contain. To achieve increased collection and recycling of waste batteries, the Directive places 'producer responsibility' obligations on manufacturers and importers of portable, industrial and automotive batteries.

The symbol shown below will be on all equipment fitted with batteries from 26th September 2008 and indicates they must NOT be disposed of with other normal waste. Instead, it is the user's responsibility to dispose of used batteries by arranging to return them to a designated collection point for the correct recycling.

For more information about where you can send your waste batteries for recycling contact your local authority office.

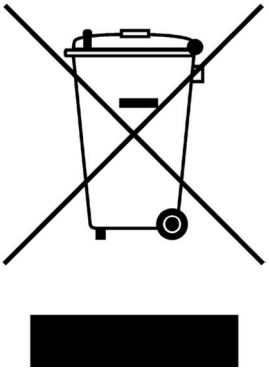

* TABLE OF CONTENTS

1. SPECIFICATION AND DIMENSIONS (1p)
1-1. DIMENSIONS
1-2. SPECIFICATION
2. NAME OF PARTS & STICKER LOCATION (2p)
2-1. NAME OF PARTS
2-2. STICKER LOCATION
3. COMPONENTS (3p)
4. HOW TO ASSEMBLE (4p)
4.1 HOW TO ASSEMBLE
5. SETUP MODE (5p)
5.1 Function for GSETUP Mode.
5.2 Function for CNTDB Mode.
6. TEST MODE (8p)
6.1 ERROR CODES
6.2 Auto Calibration Mode.
7. VEND OPTION (12p)
7.1 Standard Size Prize Mode.
7.2 Tablet Size Prize Mode.
8. TROUBLE SHOOTING
* F-a. ERROR NO 1 (15p)
* F-b. ERROR NO 2,3,4 (16p)
* F-c. ERROR NO 5,6 (17p)
* F-d. ERROR NO 7,8 (18p)
* F-e. ERROR NO 9,10 (19p)
9.KEY MASTER MINI PART LIST (20p)
9-1.ASSEMBLING BUTTON BOX ASSY
9-2.FRONT DOOR LOCK WELD ASSY
9-3.ASSEMBLING FRONT DOOR MAIN FRAME ASSY A
9-4.ASSEMBLING FRONT DOOR MAIN FRAME ASSY B
9-5.ASSEMBLING PRIZE UP DOWN ASSY
9-6.ASSEMBLING PRIZE OUT GUIDE BOX ASSY
9-7.ASSEMBLING PRIZE HANGER ASSY
9-8.ASSEMBLING PRIZE HANGER FIX ASSY
9-9.ASSEMBLING Z PUSH PIPE ASSY
9-10.ASSEMBLING Z PUSH COVER ASSY
9-11.ASSEMBLING Z PUSH MAIN BOX ASSY
9-12.ASSEMBLING Z AXIS PUSH ASSY
9-13.ASSEMBLING Y AXIS UPPER ASSY
9-14.ASSEMBLING Y STEPPING MOTOR ASSY
9-15.ASSEMBLING Y AXIS LOWER BASE ASSY
9-16.ASSEMBLING PRIZE FENCE ASSY
9-17.ASSEMBLING Y AXIS ASSY
9-18.ASSEMBLING Y-Z AXIS ASSY
9-19.ASSEMBLING MC TOP LAMP ASSY
9-20.ASSEMBLING X SHAFT UPPER L BRKT ASSY
9-21.ASSEMBLING X SHAFT L BRKT ASSY
9-22.ASSEMBLING X SHAFT R BRKT ASSY
9-23.ASSEMBLING MAIN BOARD PANEL ASSY
9-24.ASSEMBLING POWER PANEL ASSY
9-25.ASSEMBLING MAIN CABINET ASSY A
9-26.ASSEMBLING MAIN CABINET ASSY B
9-27.ASSEMBLING KEY MASTER ALL FIX ASSY
10. PERIDIC INSPECTION (47)
11. SCHEMATIC DIAGRAM (48p)
12. DESIGN RELATED PARTS (50p)

1. SPECIFICATION AND DIMENSIONS

1-1. DIMENSIONS

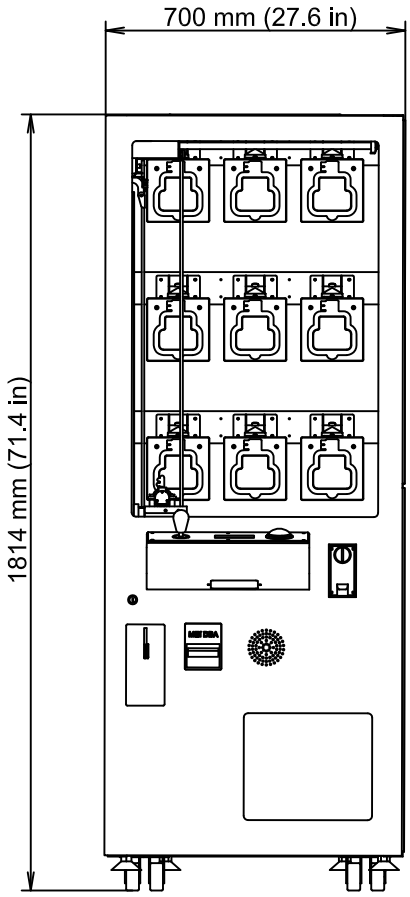

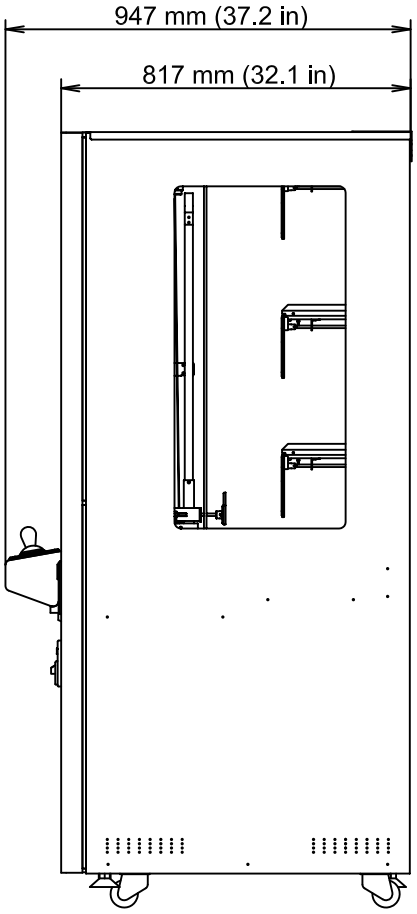

1-2. SPECIFICATION

NOMINATED VOLTAGE RANGE	AC 120V/220V
NOMINATED FREQUENCY RANGE	50Hz ~ 60Hz
AVERAGE POWER CONSUMPTION	100W
MAXIMUM POWER CONSUMPTION	130W
WEIGHT	193 Kg (425 Lb)

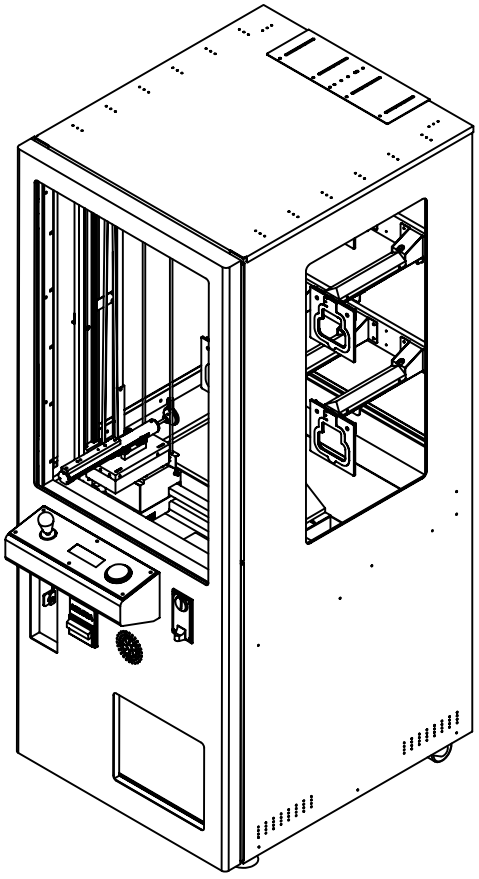

2. NAME OF PARTS & STICKER LOCATION

2-1. NAME OF PARTS

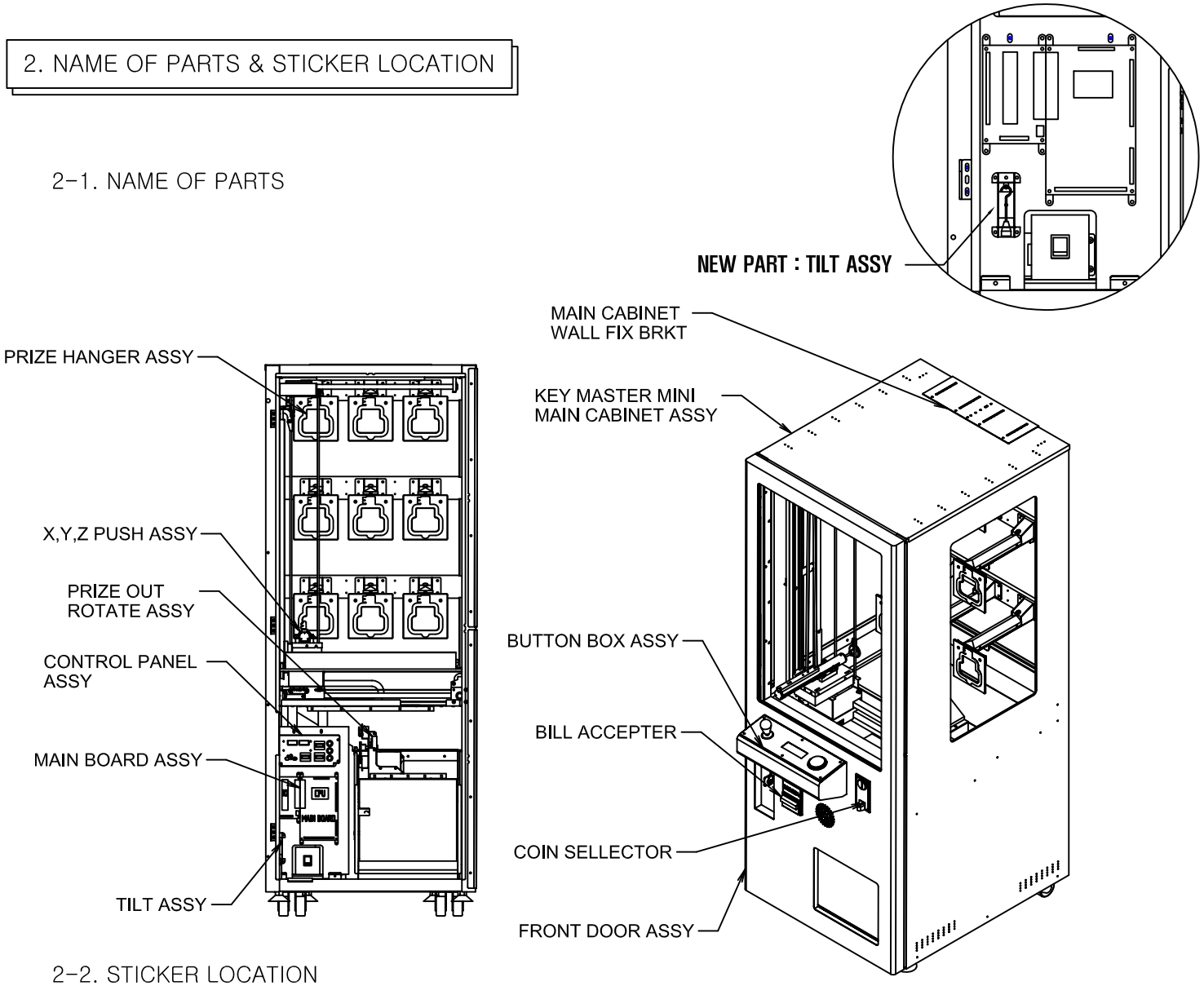

2-2. STICKER LOCATION

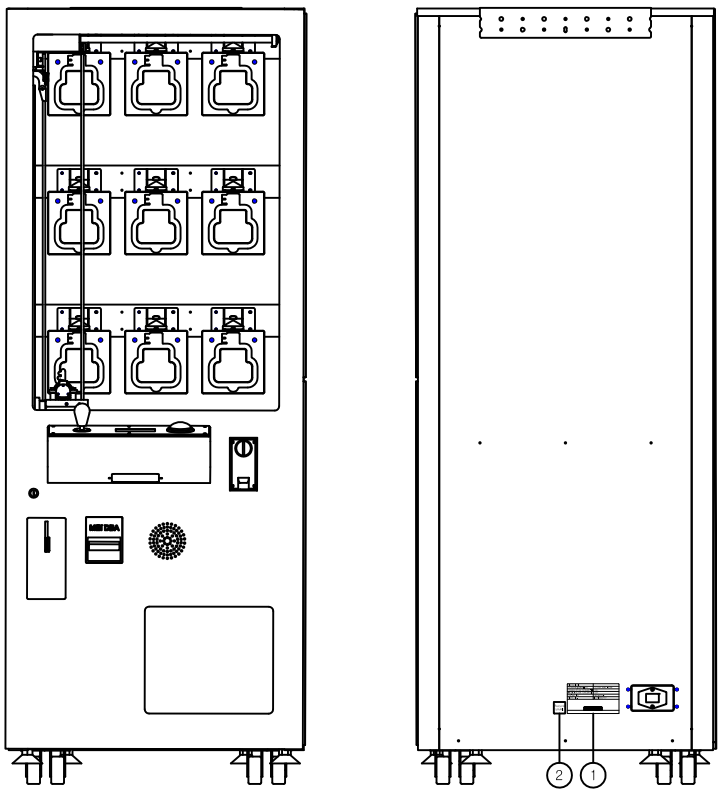

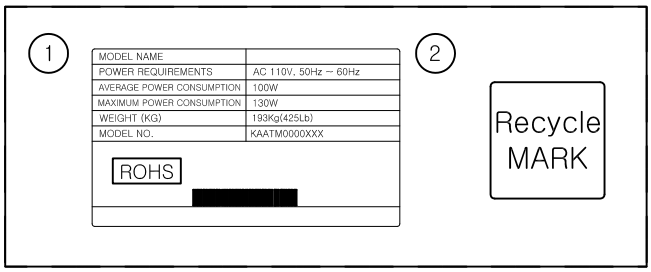

3. COMPONENTS

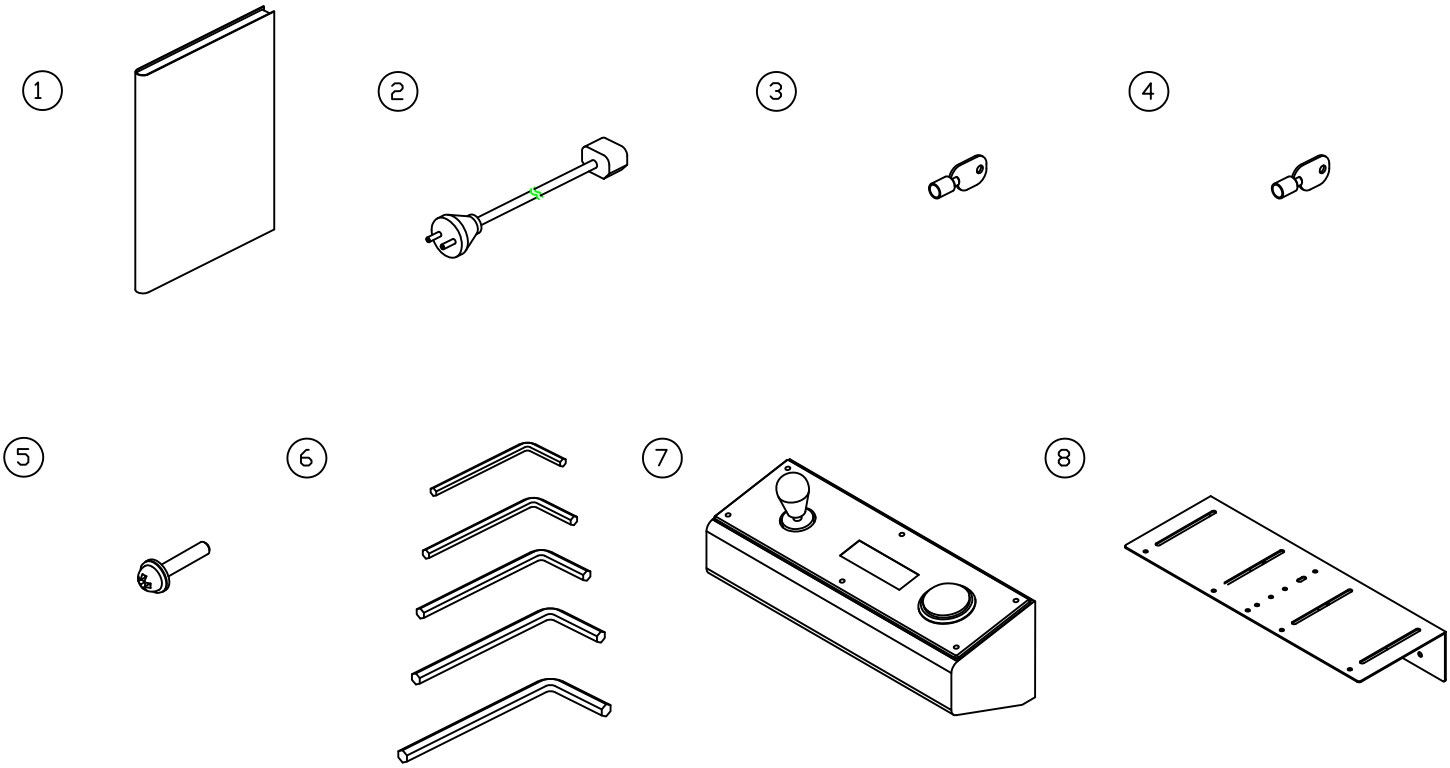

NO.	PART NAME	SPEC.	QUANTITY	CODE NO.
1	MANUAL	MANUAL	1	MKMMOMAN001
2	AC POWER CORD	125V-7A(0.75)UL (USA)	1	MELEOACP011
		250V-10A(0.75)UL (AUS)		MELEOACP013
		250V-13A(0.75)UL BF3 (UK ONLY)		MELEOACP006
3	FRONT DOOR KEY	7001	2	-
4	CASH BOX KEY	6001	2	-
5	BOLT	M4x10L	6	-
6	WRENCH	1.5mm	1ea	MXXXOREN007
		2mm		MXXXOREN003
		2.5mm		MXXXOREN001
		3mm		MXXXOREN004
		4mm		MXXXOREN002
7	BUTTON BOX ASSY	-	1	MKMMOMEP006
8	MAIN CABINET WALL FIX BRKT (MINI)	-	1	MKMMOMEP034

4-1. HOW TO ASSEMBLE

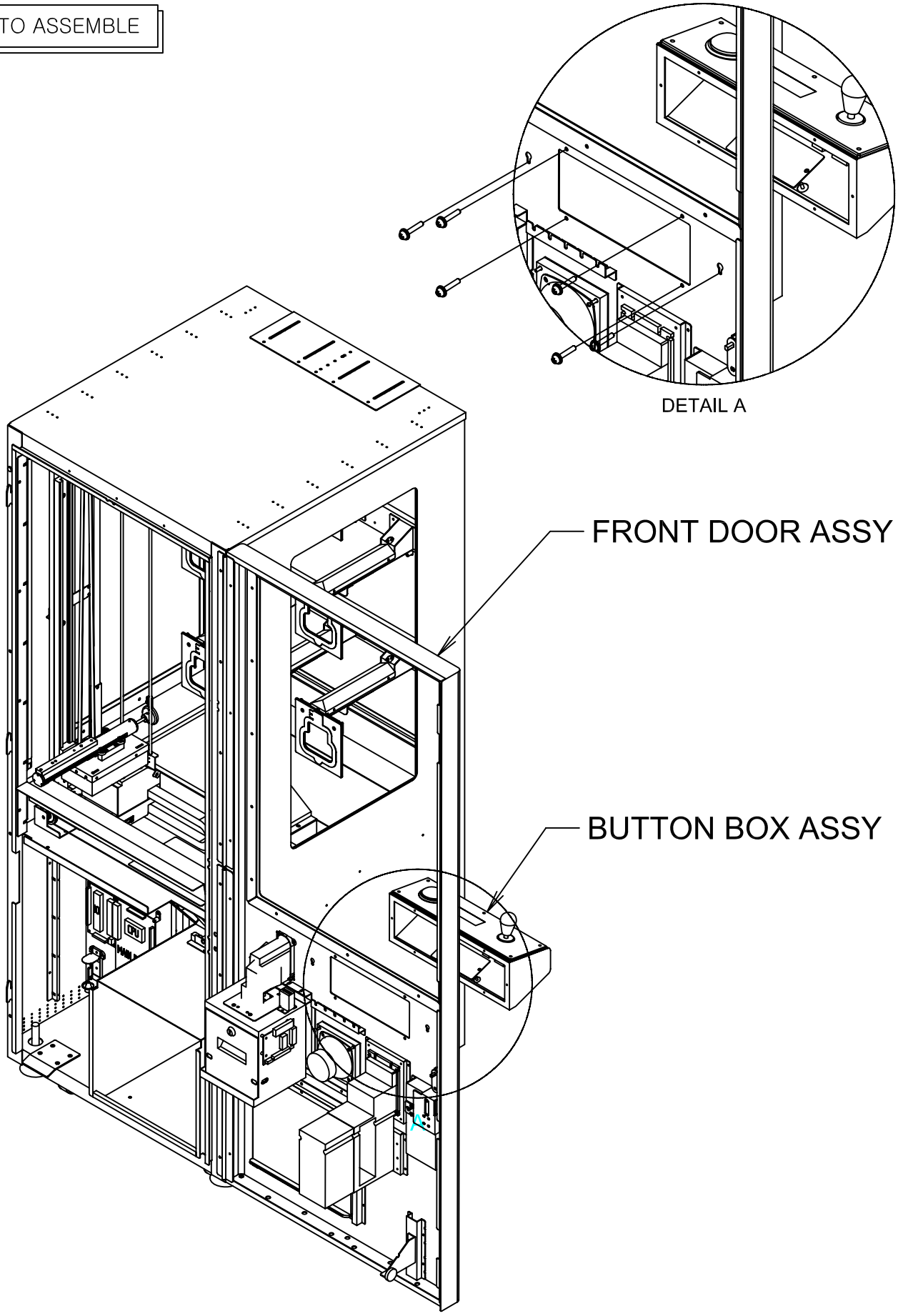

1. Connect the BUTTON BOX ASSY Harness as shown above.

2. Assemble the BUTTON BOX ASSY with enclosed bolts 6EA (M4 x 10L) to the FRONT DOOR ASSY.

5. SETUP MODE

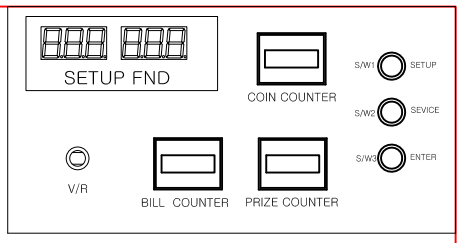

CONTROL PANEL

1. Each Switch(SW1, SW2 and SW3) on Control Panel.
   1) SW1 : a)Selecting each Mode and Function.

   2) SW2/SW3 : a) Moving each Mode and Function.
   b) Changing each Function Value.
   c) SW2 is for SERVICE at normal mode.
   d) SW3 is for TEST at normal mode.

2. How to setup.

   1) Enter Mode by pushing SW1. Then GSETUP Mode appears.
   2) Move each Mode(GSETUP, CNTDB or END) with SW2/SW3.
   3) Select Mode(GSETUP, CNTDB or END) by pushing SW1 again.
   4) The Modes are :
      – Mode display

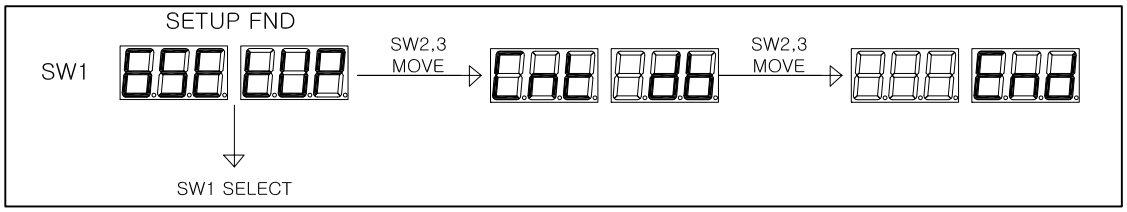

Factory Recommended DIP Switch Settings Table			
Standard Size Prize Mode		**Tablet Size Prize Mode**	
Game will assume all prize rows/arms are positioned as the game arrived from the factory. (Top 3/Mid 3/Bot 3)		Game will assume that top row prize arms #2 and #4 have been removed and the middle prize row arm has been relocated to the lower mounting position. (Top 2/Mid 3/Bot 3)	
DIP SW 1	**OFF**	**DIP SW 1**	**ON**
DIP SW 2	**OFF**	**DIP SW 2**	**OFF**
DIP SW 3	**OFF**	**DIP SW 3**	**OFF**
DIP SW 4	**OFF**	**DIP SW 4**	**OFF**

<u>Optional Operator DIP Switch Settings</u>

(Higher Value Prize Setting)
- **(DIP SW2 - OFF)** The difficulty of the game is set to "HARD". The game will be much harder to reward a prize, up until the set threshold is reached.

(Medium Value Prize Setting)
- **(DIP SW2 - ON)** The difficulty of the game is set to "MEDIUM". The game will become easier at some point within it's set threshold.

(Lower Value Prize Setting)
- **(DIP SW3 - ON)** The difficulty of the game is set to "EASY". The game will operate on "EASY VEND" mode. (This is the easiest game setting)

(Note : All Data must be cleared according to "CLEAR" in section 5.2 of this manual.)

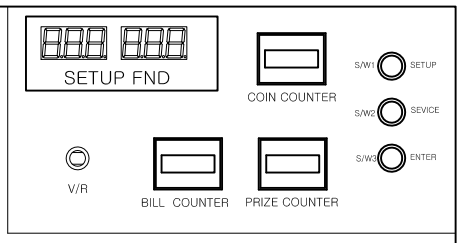

CONTROL PANEL

5.1 Function for GSETUP Mode.

1) At GSETUP mode, press SW1 again to enter into each function.
2) Press SW2/SW3 to move to each function.
3) After selecting each funtion, press SW1 in order to set function value.
4) Change Function Value with SW2/SW3.
5) Press SW1 again return to Function after changing Function Value.

– Mode display

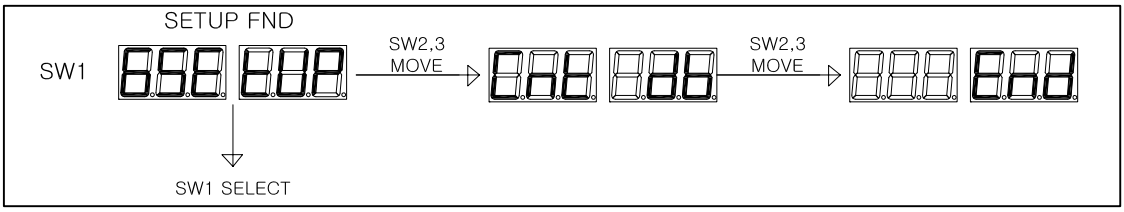

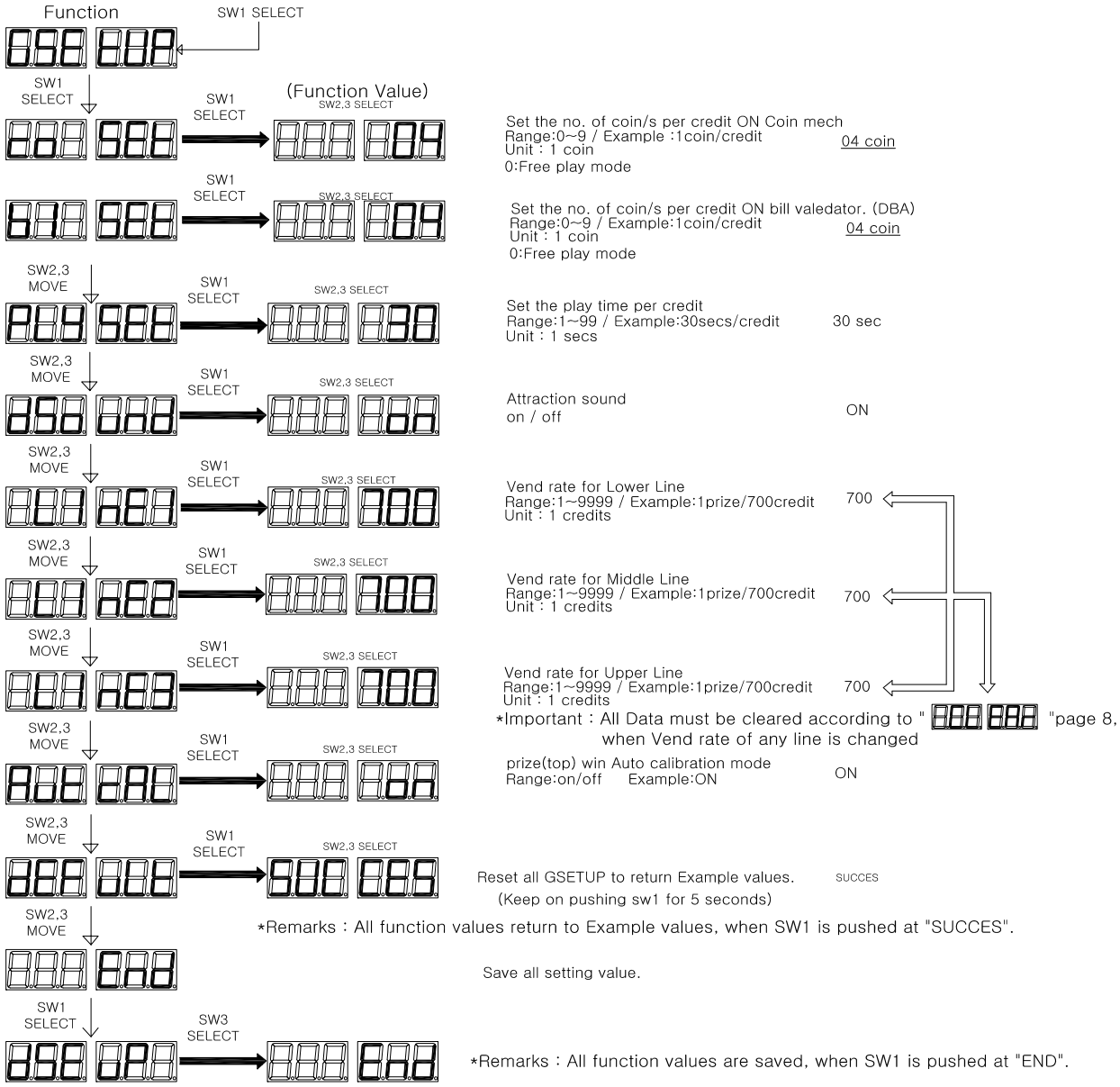

*Remarks : 1) Return to game mode by pushing SW1.
2) Move to CNTDB mode by pushing SW2/SW3.

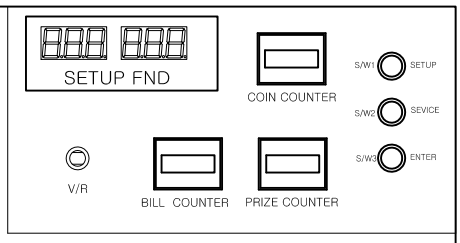

CONTROL PANEL

5.2 Function for CNTDB Mode.

1) At CNTDB mode, press SW1 again to enter into each function.
2) Press SW2/SW3 to move to each function.
3) After selecting each funtion, press SW1 in order to set function value.
4) Change Function Value with SW2/SW3.
5) Press SW1 again return to Function after changing Function Value.

Mode display

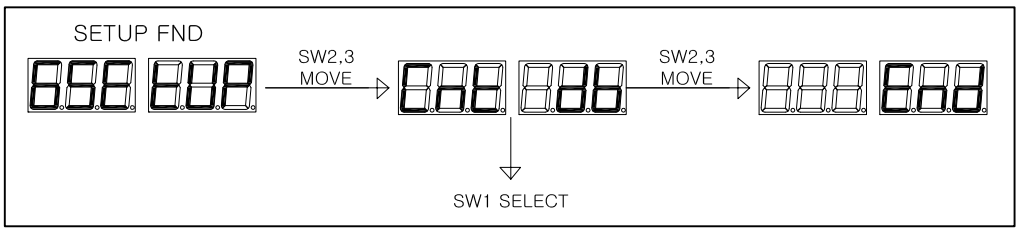

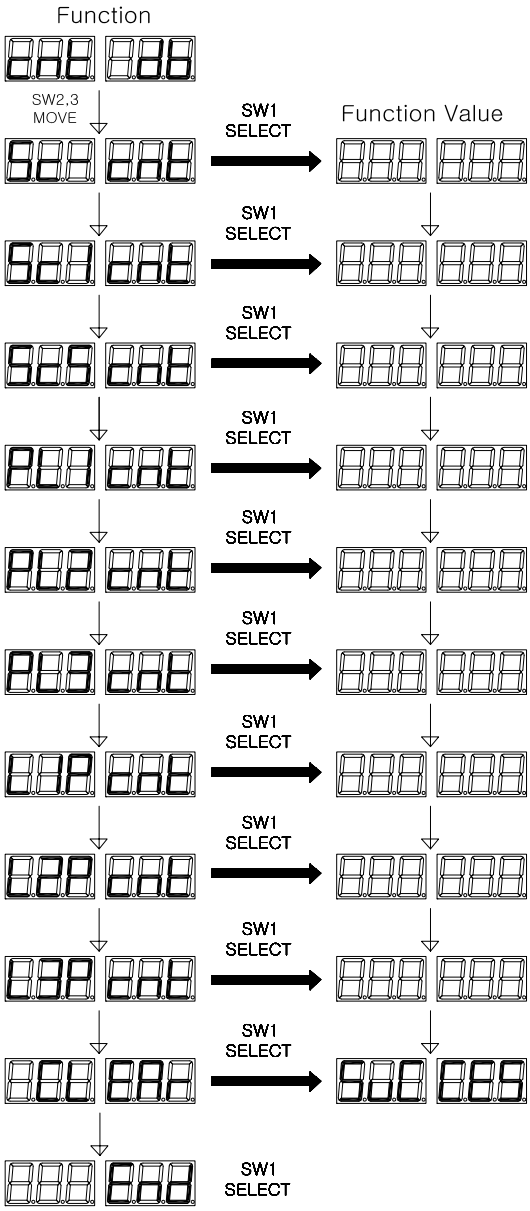

Total accumulated Income

Total Coin accumulated Income

Total service accumulated Income

The no. of dispensed prize at Lower Line

The no. of dispensed prize at Middle Line

The no. of dispensed prize at Upper Line

The no. of attempt at Lower Line

The no. of attempt at Middle Line

The no. of attempt at Upper Line

Delete the saved data
(Keep on pushing sw1 for 5 seconds)
*Important : All Data must be cleared after changing payout rate.
if not, vend rate is incorrect.

MODE EXIT

*Remarks : All data are cleared after deleting the saved data, when SW1 is pushed at "END".

6. TEST MODE

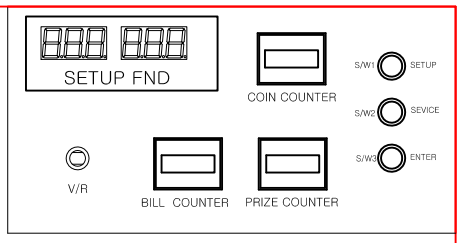

CONTROL PANEL

1) Execute Test Mode by pushing SW3.
2) At TEST mode, press SW1 again to enter into test function.
3) Press SW2/SW3 to move to each function.

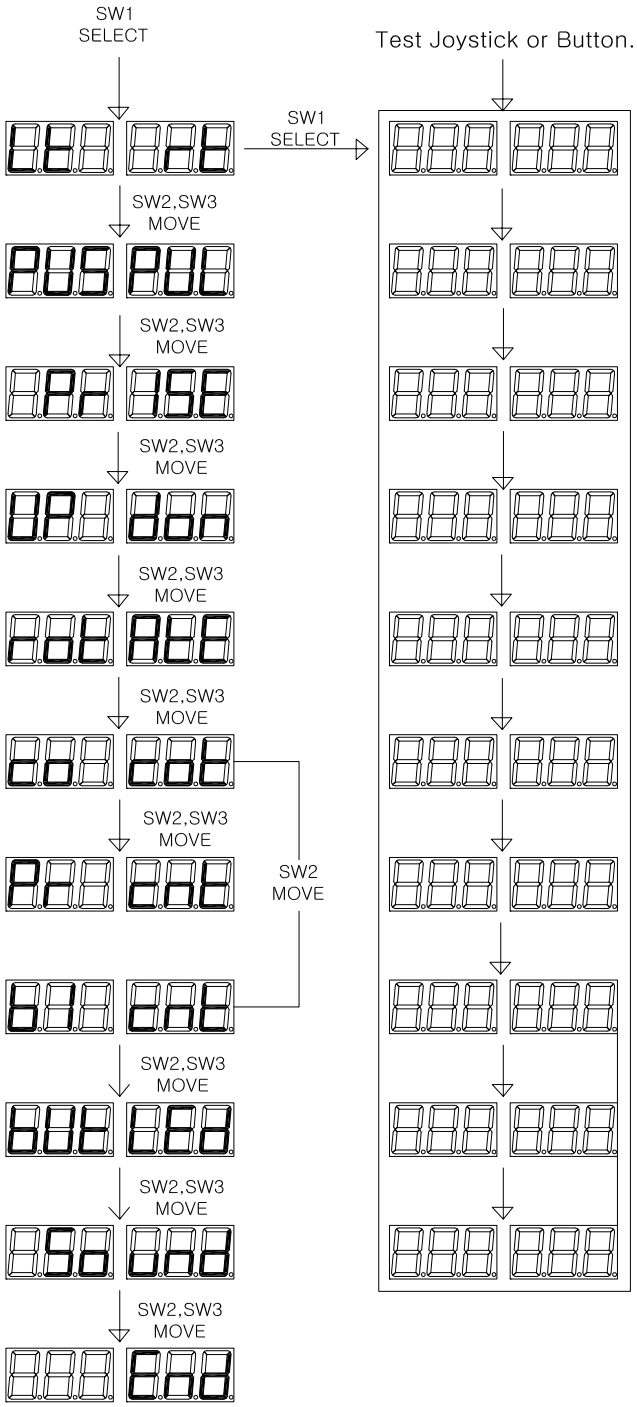

X-axis motor

Moving the push assembly forwards and backwards

Opening and closing the prize door

Y-axis up and down

Rotating Key assembly

Coin counter

Prize counter

Bill Aceptor counter

Button LED

SOUND (1~16)

4. Check the status of sensors and switches.

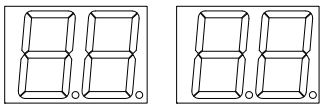

NO.	CONTENT	PLAY FND
1	X-AXIS Left Switch checking	TIME 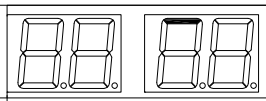 CREDIT
2	X-AXIS Right switch checking	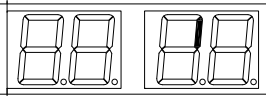
3	Y-AXIS up switch checking	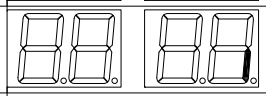
4	Y-AXIS down switch checking	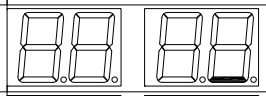
5	Push front sensor checking	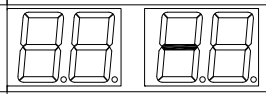
6	Push Rear sensor checking	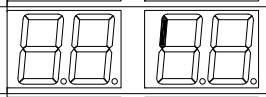
7	Push Back sensor checking	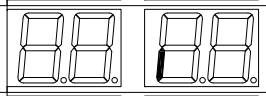
8	Rotary point sensor checking	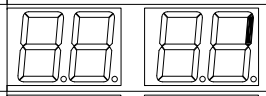
9	Joystick switch left checking	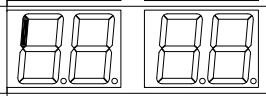
10	Joystick switch right checking	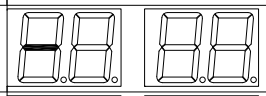
11	Up button switch checking	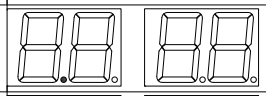
12	coin select checking	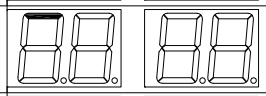
13	Setup button checking	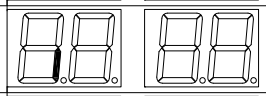
14	service button checking	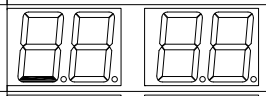
15	test button checking	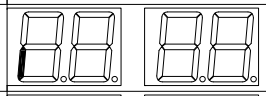
16	prize out open swich checking	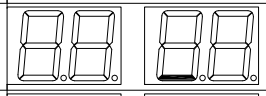
17	prize out close swich checking	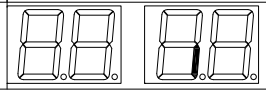

6.1 ERROR CODES

PLAY FND

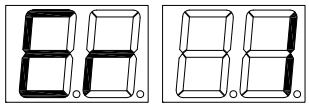

—— Error with Rotating motor or sensor.

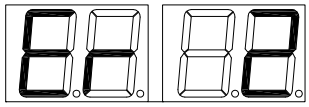

—— Error with Push motor or BACK(C) Switch.

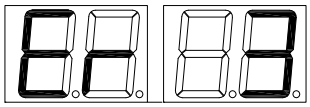

—— Error with Push motor or FRONT(A) switch.

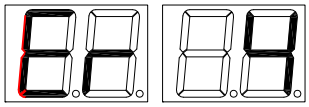

—— Error with Push motor or REAR(B) switch.

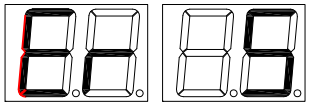

—— Error with stepping motor or up switch.

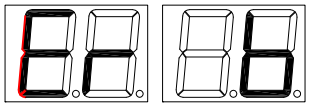

—— Error with stepping motor or down switch.

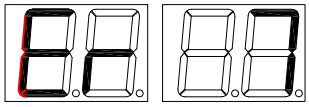

—— Error with x-axis motor or left switch.

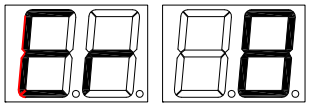

—— Error with x-axis motor or right switch.

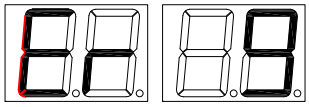

—— Error with prize motor or up switch.

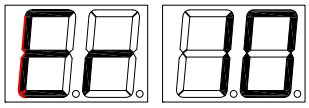

—— Error with prize motor or down switch.

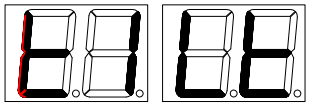

—— In case Tilt Switch works.
(This function automatically stops after 30 seconds and machine operates again.)

6.2 CALIBRATION MODE.

Caution

It is important for the operation of the game that the KEY mechanism is calibrated and remains calibrated at all times. It is therefore recommended that AUTO CALIBRATION MODE is carried out weekly.

It is also recommended that AUTO CALIBRATION MODE is performed after the vend of every major Prize.

If the machine is moved or bumped then an AUTO CALIBRATION MODE should be carried out.

Failure to perform AUTO CALIBRATION MODE after these events may result in a false vend and may reduce the performance of the game.

1) Auto Calibration Mode.

1-1 This allows machine to be calibrated automatically.

1-2 Turn on machine with SW1 pushed for 3 seconds.

1-3 It takes around 20 minutes.

2) Initializing Credit FND.

2-1 Turn on machine with SW2 pushed for 3 seconds.

3) Confirming Calibration mode.

3-1 This allows machine to automatically pass through each hole up to 999 times.

3-2 Turn on machine with SW3 pushed for 3 seconds.

3-3 Turn off machine to stop this mode.

SETUP FND

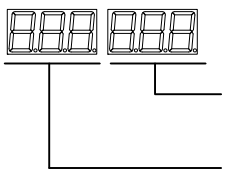

The no. of passing through holes.

The no. of Not passing through holes.

7. VEND OPTION

7.1 Standard Size Prize Mode.

Important

The length of the Tie is critical. Failure to hang each prize by the recommended length as stated in this manual may result in the prize being obstructed during vend.

Never apply prizes which are greater than the maximum sizes allowed. Doing so will result in the prizes jamming or vending prematurely.

(MAIN BOARD DIP SW)

STANDARD TYPE MAXIMUM PRIZE SIZE

Width : 140mm (5.5in)
Depth : 100mm (3.9in)
Height : 170mm (6.7in)
Length of Tie : 50mm (2.0in)

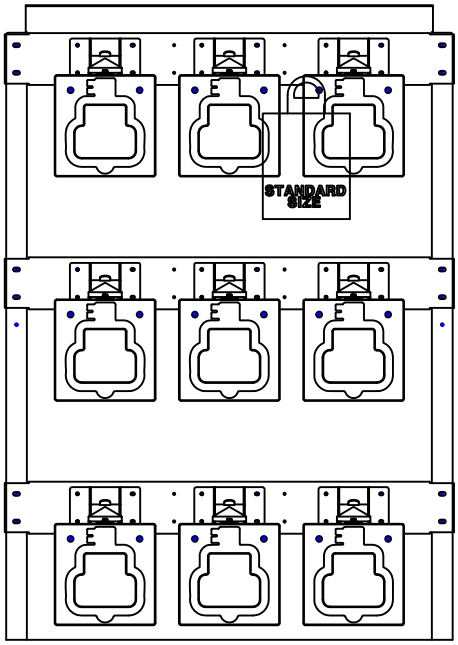

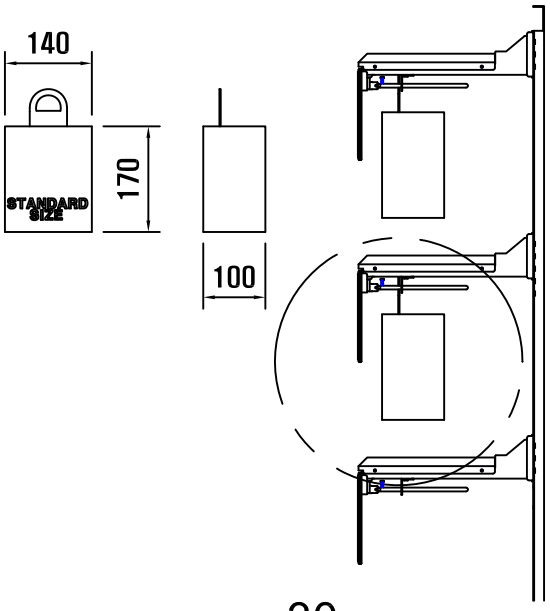

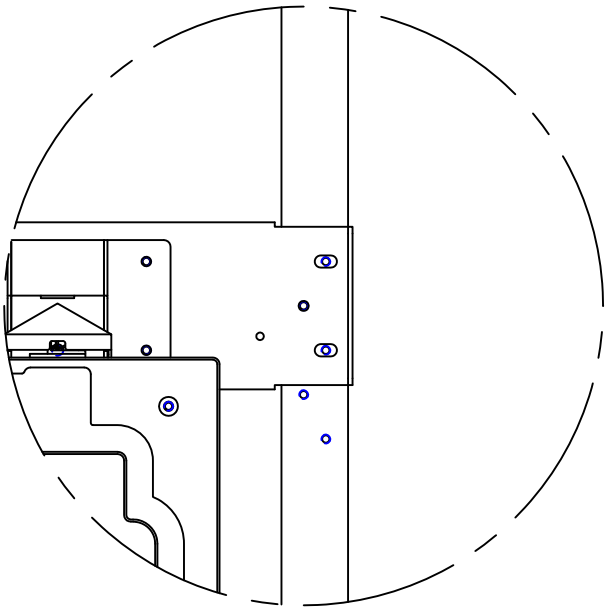

DETAIL A

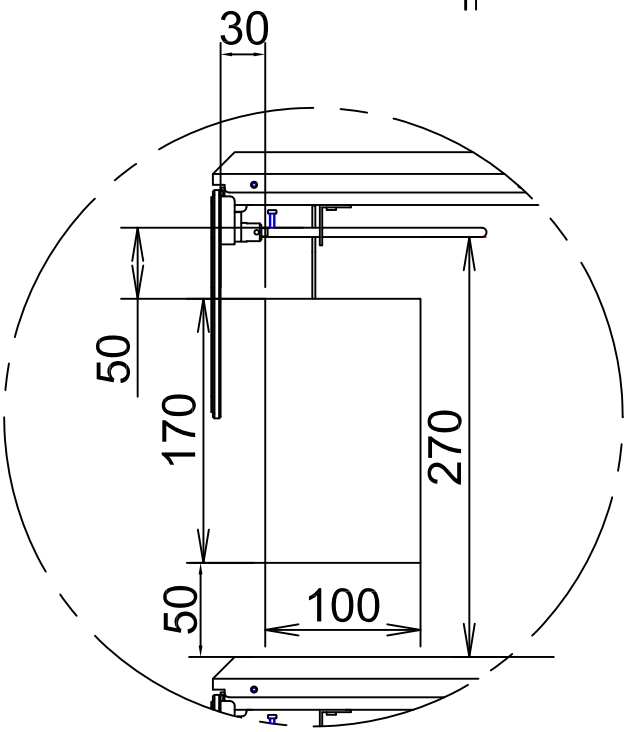

DETAIL B

7.2 Tablet Size Prize Mode.

1. Turn On the DIP SW when the power is turned off and then turn ON the power while SW1 being pushed.
   (Keep on pushing SW1 for 5 seconds)
2. It takes about 12 minutes to finish Calibration

Important

The length of the Tie is critical. Failure to hang each prize by the recommended length as stated in this manual may result in the prize being obstructed during vend.

Never apply prizes which are greater than the maximum sizes allowed. Doing so will result in the prizes jamming or vending prematurely.

DETAIL B

Tablet TYPE
MAXIMUM PRIZE SIZE
Width : 204mm (8.0in)
Depth : 70mm (2.27in)
Height : 255mm (10.0in)
Length of Tie : 45mm (1.7in)

DETAIL C

Tablet TYPE
MAXIMUM PRIZE SIZE
Width : 140mm (5.5in)
Depth : 90mm (3.5in)
Height : 140mm (5.5in)
Length of Tie : 50mm (2.0in)

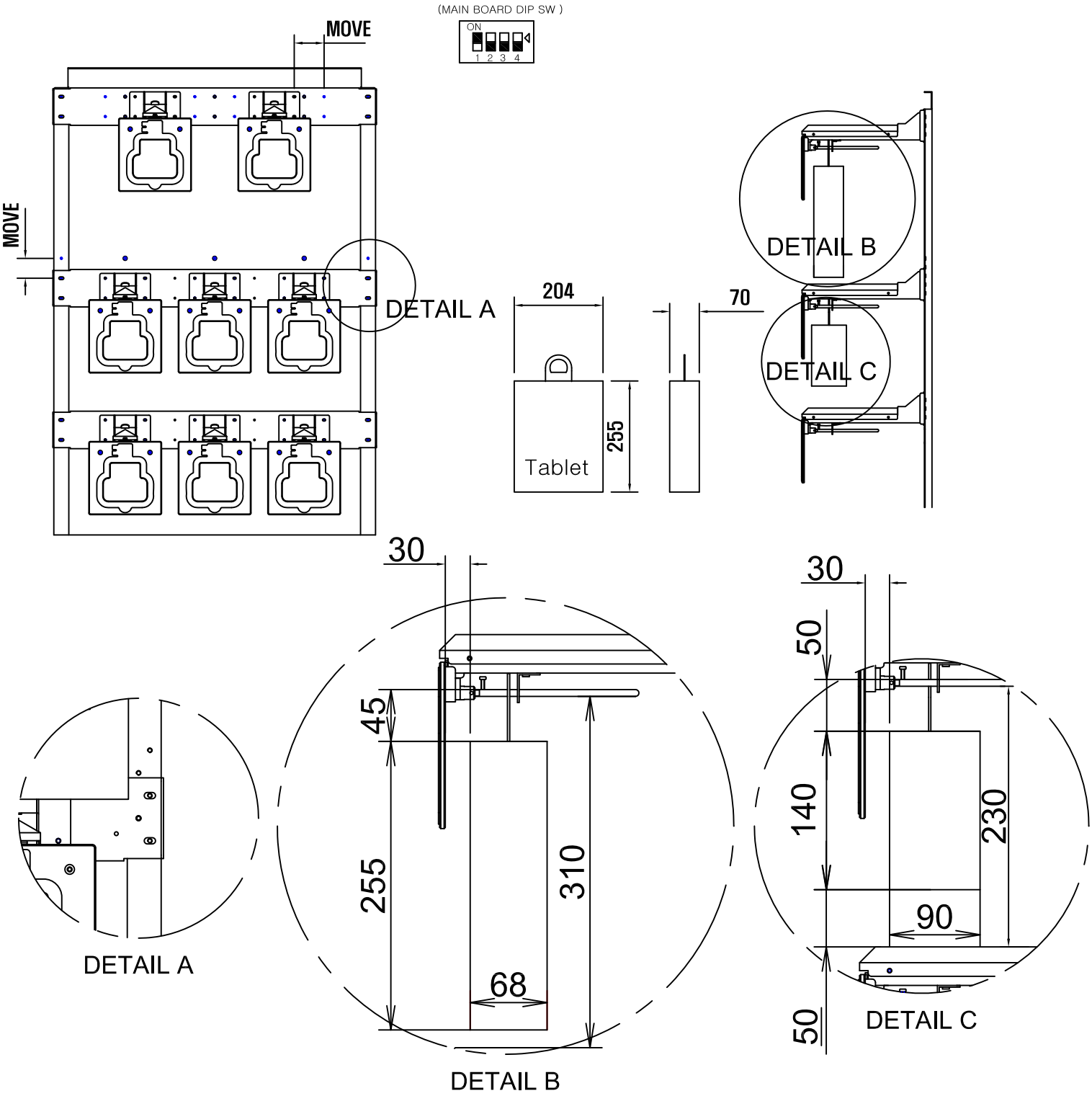

7.2 Tablet Size Prize Mode.

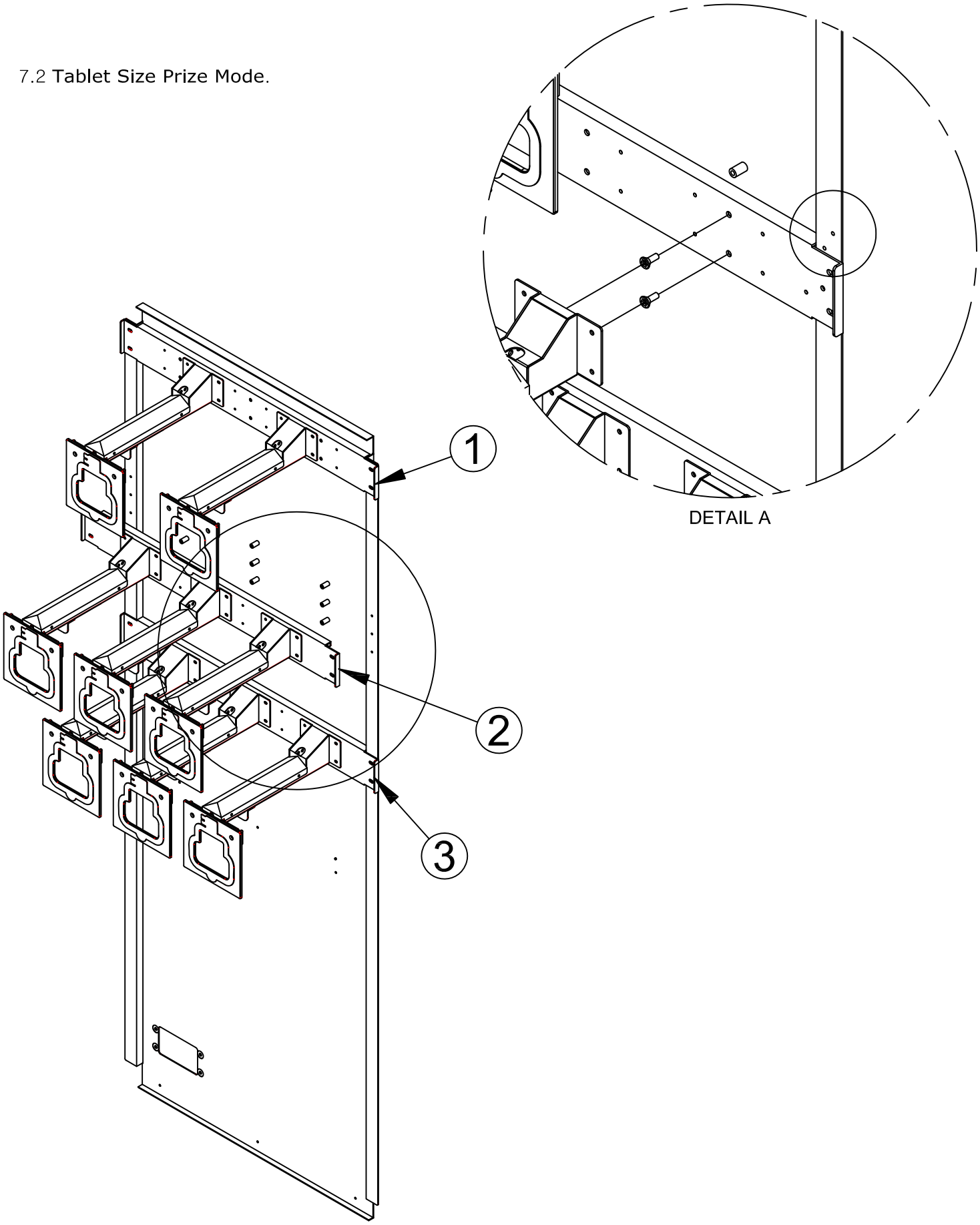

NO.	CODE NO.	QUANTITY	PART NAME	SPEC.
1	MKMM0MEP102	1	PRIZE HANGER FIX ASSY TOP (MINI)	-RED-
2	MKMM0MEP102	1	PRIZE HANGER FIX ASSY MIDDLE (MINI)	-BLUE-
3	MKMM0MEP102	1	PRIZE HANGER FIX ASSY LOWER (MINI)	-SILVER-

8. TROUBLE SHOOTING

-TEST MODE

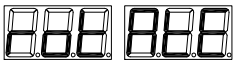

Rotating Key assembly

F. TROUBLE SHOOTING

* F-a. ERROR NO 1.

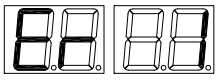

#Rotator Motor or Sensor does not works properly.

When Rotator Motor Doesn't Work.

↓

Check The Harness Connected To The Motor

↓

CHECK IF ANY BOLTS ON THE MOTOR ARE LOOSEN.

↓

REPLACE THE MOTOR.

↓

REPLACE THE MAIN BOARD.

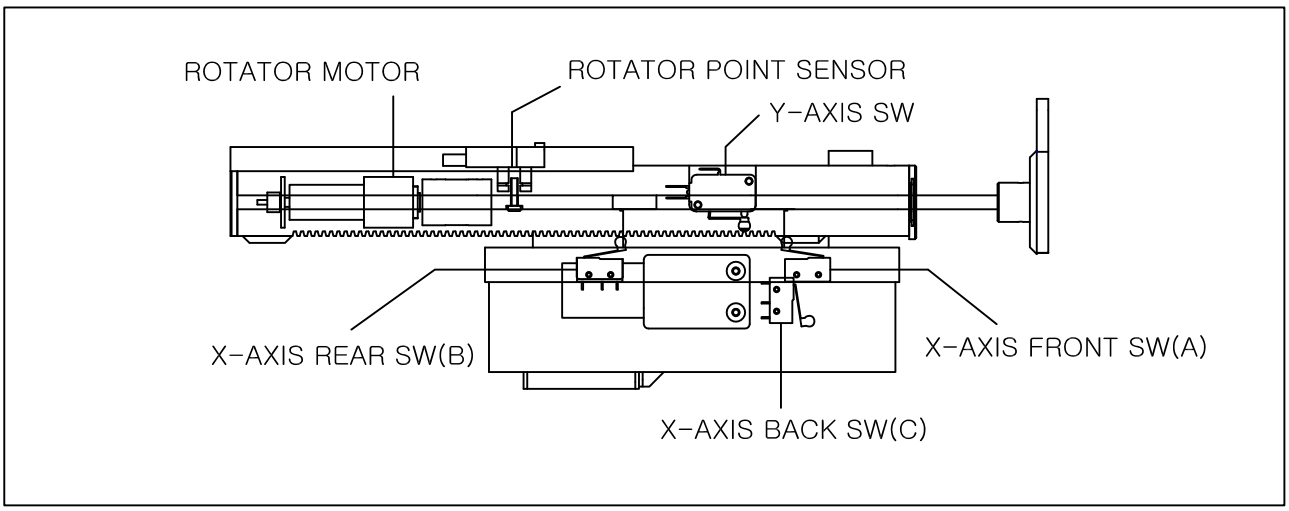

WHEN ROTATOR MOTOR WORKS PROPERLY.

↓

CHECK IF PHOTO SENSOR WORKS PROPERLY.

↓

REPLACE THE PHOTO SENSOR PCB.

↓

REPLACE THE MAIN BOARD.

-TEST MODE

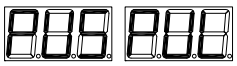

Moving the push assembly forwards and backwards

F. TROUBLE SHOOTING

* F-b. ERROR NO 2,3,4

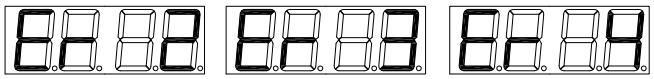

X-AXIS BACK SW(C) X-AXIS FRONT SW(A) X-AXIS REAR SW(B)

#Push Motor or Switch (A,b,c) does not works properly.

When Push Motor Doesn't Work.

↓

Check The Harness Connected To The Motor

↓

CHECK IF ANY BOLTS ON THE MOTOR ARE LOOSEN.

↓

REPLACE THE MOTOR.

↓

REPLACE THE MAIN BOARD.

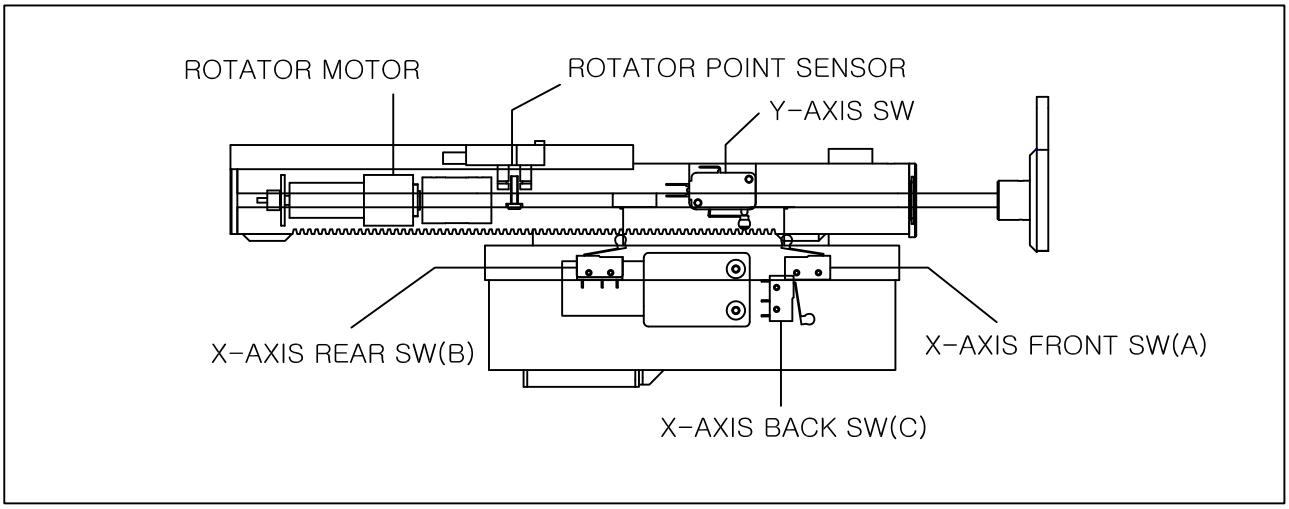

When Push Motor Works Properly.

↓

Check If Switch Works Properly.

↓

Replace The Main Board.

-TEST MODE

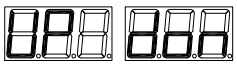

Y-axis up and down

F. TROUBLE SHOOTING

* F-c. ERROR NO 5,6

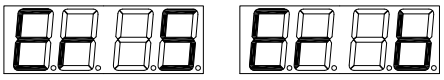

#Y-axis stepping Motor or Switch does not works properly.

When Stepping Motor Doesn't Work.

Check The Harness Connected To The Motor

Check If Any Bolts On The Motor Are Loosen.

Replace The Motor.

Replace The Main Board.

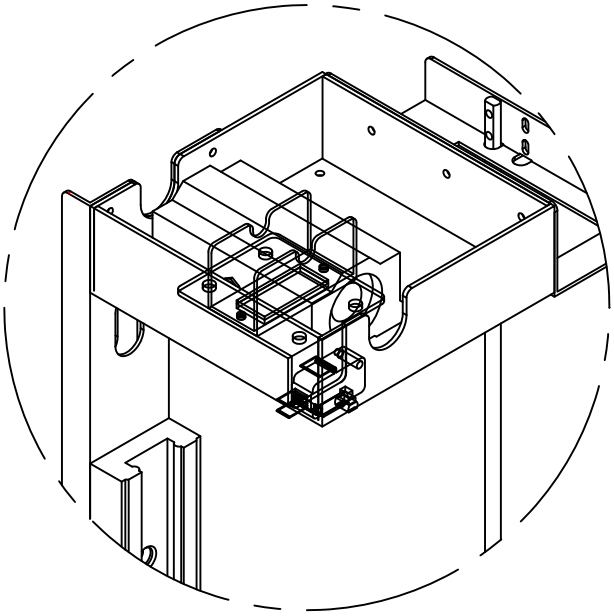

DETAIL A

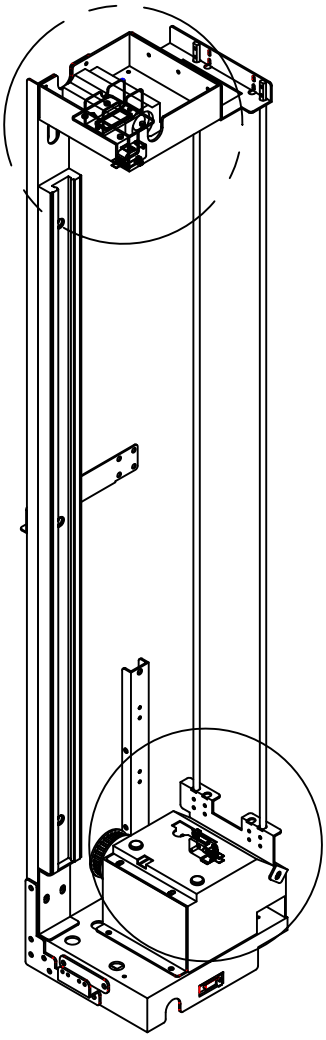

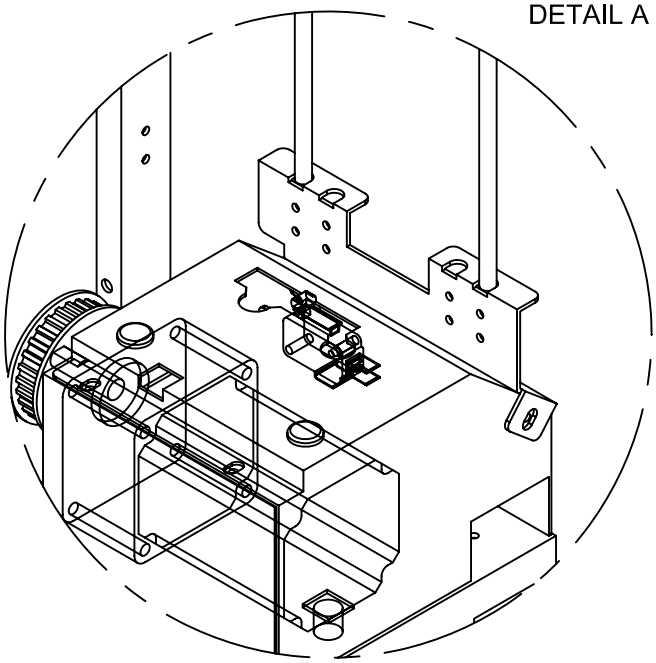

DETAIL B

When Stepping Motor Works Properly.

Check If Switch Works Properly.

Replace The Main Board.

-TEST MODE

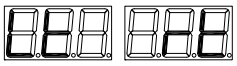

X-axis motor

F. TROUBLE SHOOTING

* F-d. ERROR NO 7,8

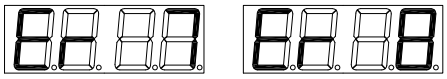

#x-axis Motor or Switch does not works properly.

When x-axis Motor Doesn't Work.

↓

Check The Harness Connected To The Motor

↓

Check If Any Bolts On The Motor Are Loosen.

↓

Replace The Motor.

↓

Replace The Main Board.

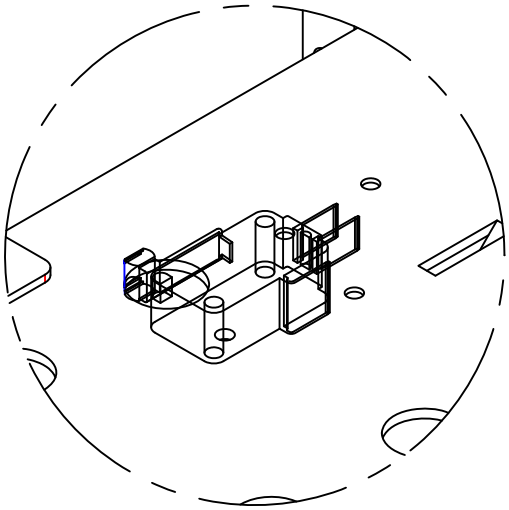

DETAIL A

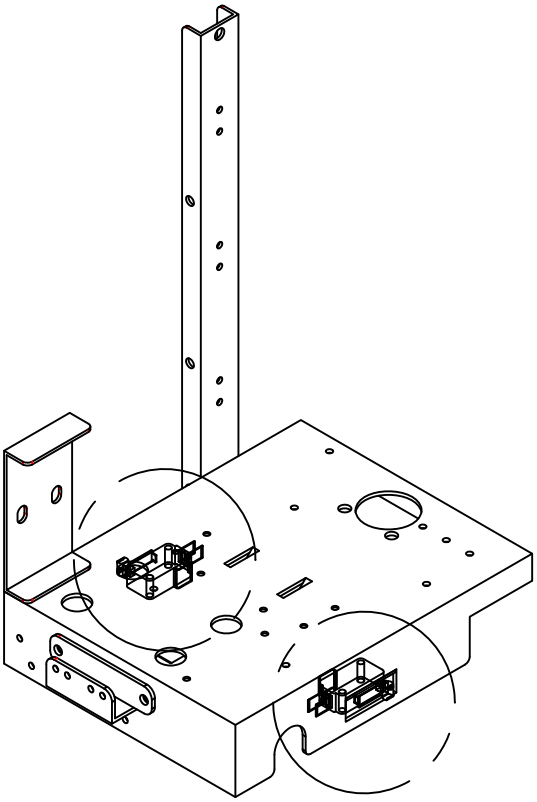

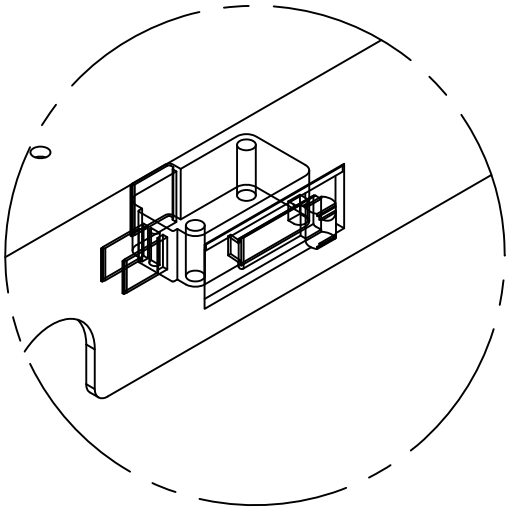

DETAIL B

When x-axis Motor Works Properly.

↓

Check If Switch Works Properly.

↓

Replace The Main Board.

-TEST MODE

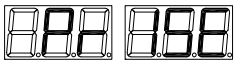

Opening and closing the prize door

F. TROUBLE SHOOTING

* F-e. ERROR NO 9,10

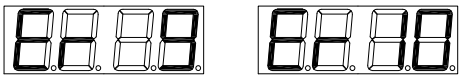

prize door Motor or Switch does not works properly.

When prize door Motor Doesn't Work.

Check The Harness Connected To The Motor

Check If Any Bolts On The Motor Are Loosen.

Replace The Motor.

Replace The Main Board.

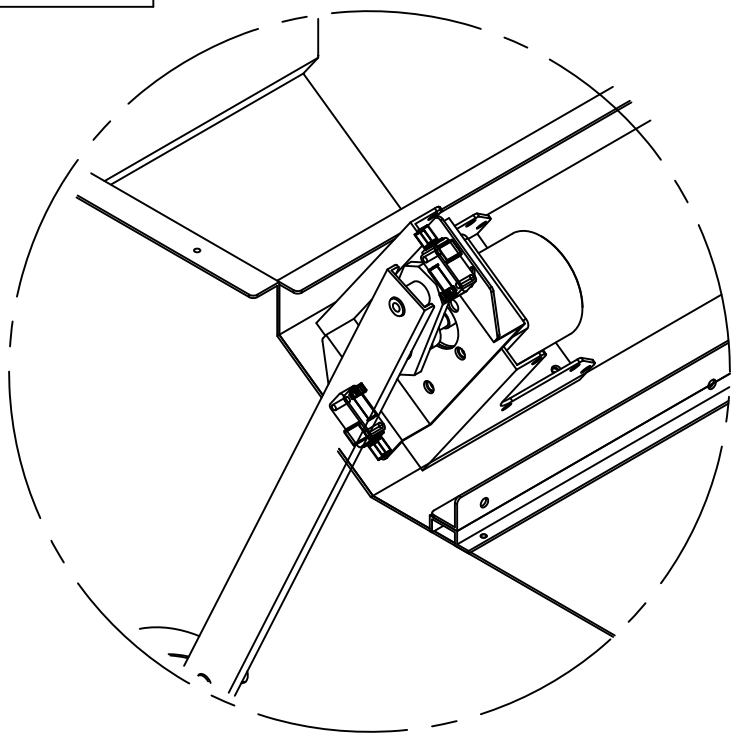

DETAIL A

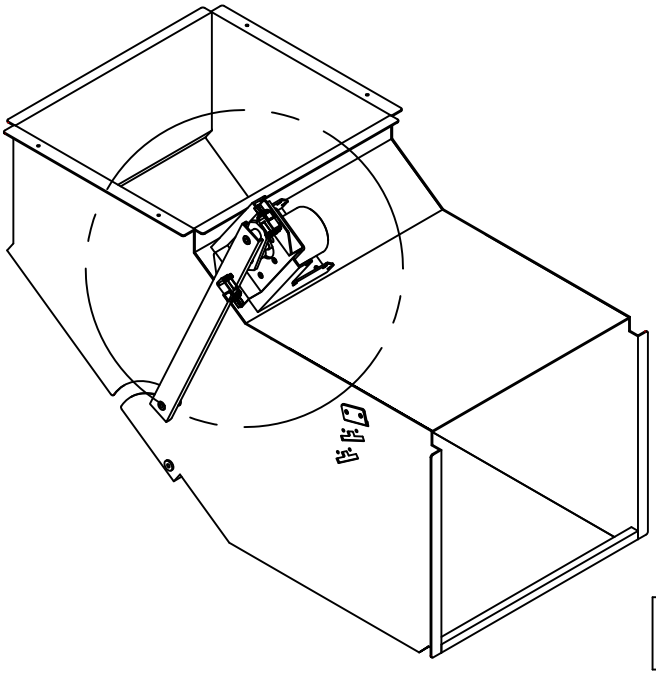

When prize door Motor Works Properly.

Check If Switch Works Properly.

Replace The Main Board.

9.KEY MASTER MINI PART LIST

9-1.ASSEMBLING BUTTON BOX ASSY

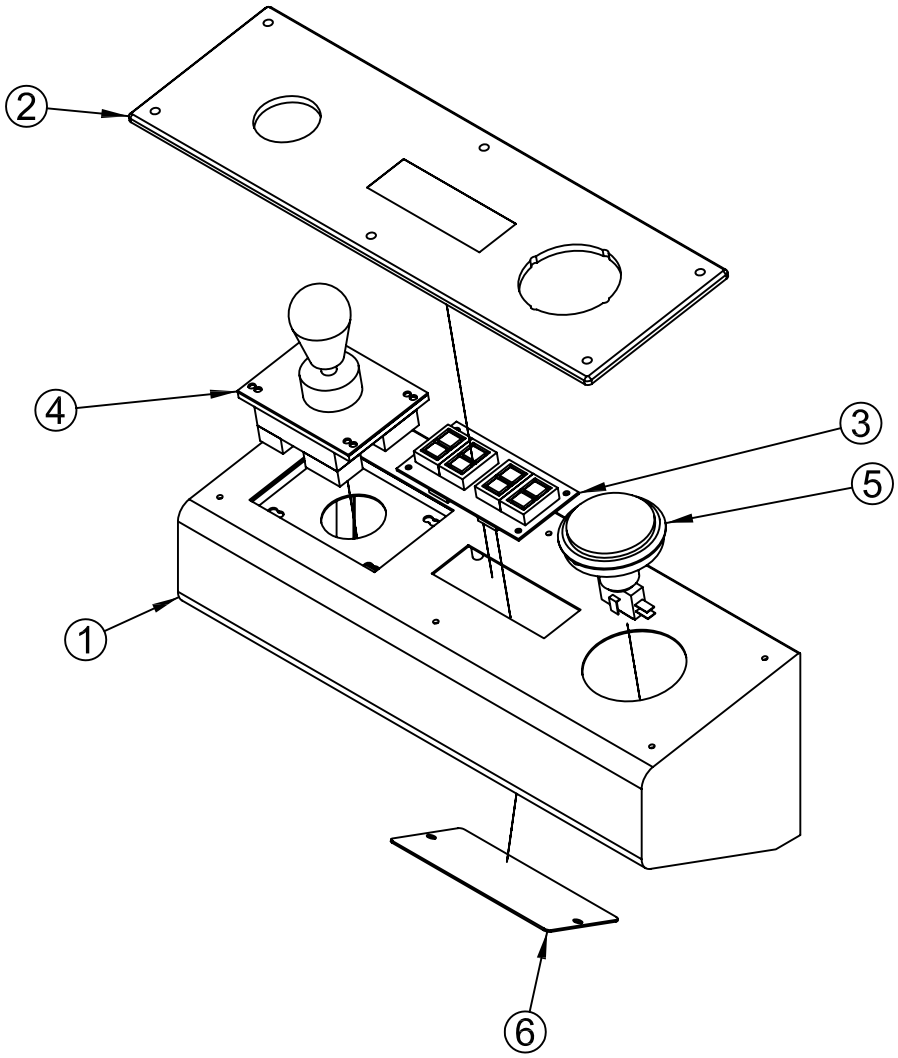

NO.	CODE NO.	QUANTITY	PART NAME	SPEC.
1	MKMM0MEP001	1	BUTTON BOX WELD ASSY (MINI)	-
2	MKMM0SHE002	1	BUTTON ACRYL A (MINI)	3T 118*498
3	ACRM0PCB008	1	PLAY FND BOARD(COIN FND PCB)	KEY MASTER
4	AZZZ0000041	1	LEVER ASS'Y(JOYSTICK)	306 PINK
5	MSTB0000006	1	BUTTON ASSY(BUTTON)	BULE 60MM
6	MKEM0MEP002	1	BUTTON PANEL FIX BRKT	-

9-2.FRONT DOOR LOCK WELD ASSY

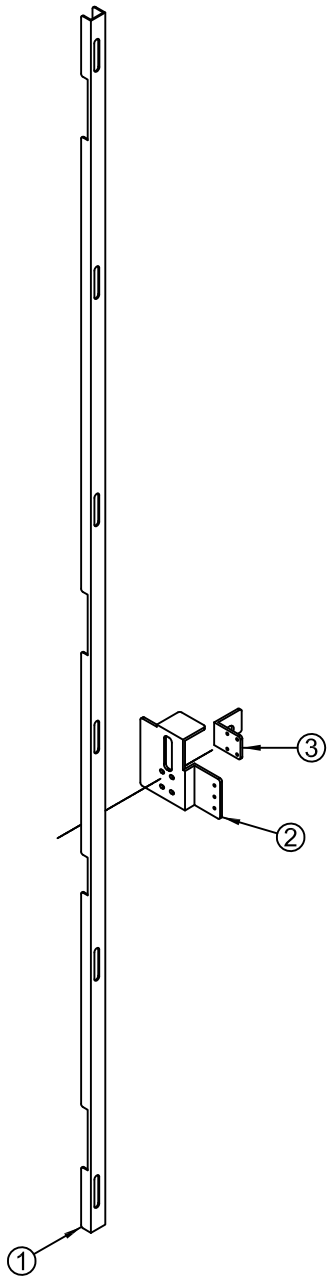

NO.	CODE NO.	QUANTITY	PART NAME	SPEC.
1	MKMM0MEP004	1	FRONT DOOR LOCK SUPPORT B (MINI)	-
2	MKMM0MEP002	1	FRONT DOOR LOCK SUPPORT C (MINI)	-
3	MKMM0MEP003	1	FRONT DOOR LOCK PLATE (MINI)	-

9-3.ASSEMBLING FRONT DOOR MAIN FRAME ASSY A

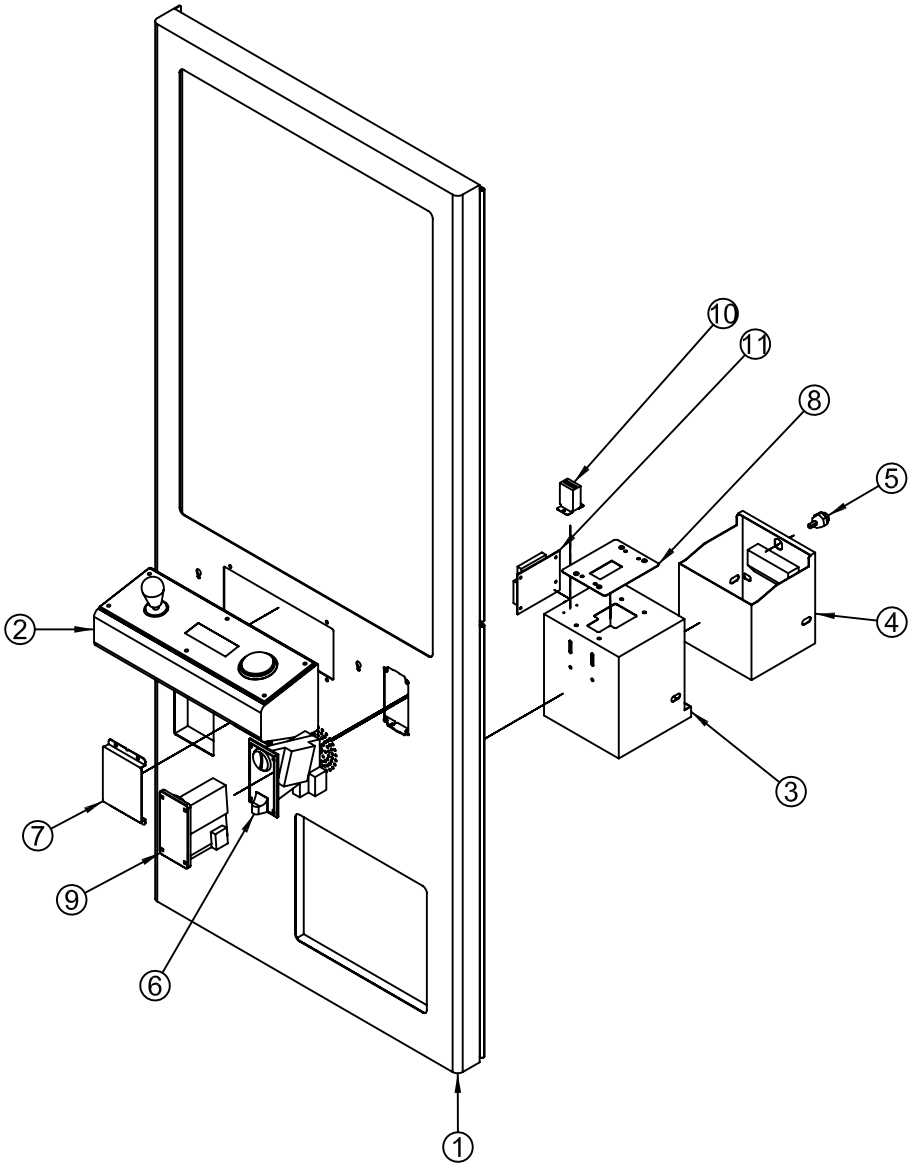

NO.	CODE NO.	QUANTITY	PART NAME	SPEC.
1	MKMM0MEP005	1	FRONT DOOR MAIN FRAME WELD ASS (MINI)	-
2	MKMM0MEP006	1	BUTTON BOX ASSY (MINI)	-
3	MKMM0MEP007	1	FRONT DOOR CASH BOX A (MINI)	-
4	MKMM0MEP008	1	FRONT DOOR CASH BOX B (MINI)	-
5	MZZZ0KEY013	1	KEY ASS'Y 6001	6001
6	MZZZ0COS025	1	COIN SELECTOR	TW-130Q
7	MKEM0MEP015	1	BILL PULSE BRKT	-
8	MKMM0MEP009	1	COIN CHUT BRKT(MINI STANDARD)	-
9	OPTION B	1	COIN SELECTOR	SR3-MONEY CTRL(UK)
10	OPTION C	1	COUNTER UK (SR3)	
11	OPTION D	1	EXCEL CREDIT(SR3) PCB	-

9-4.ASSEMBLING FRONT DOOR MAIN FRAME ASSY B

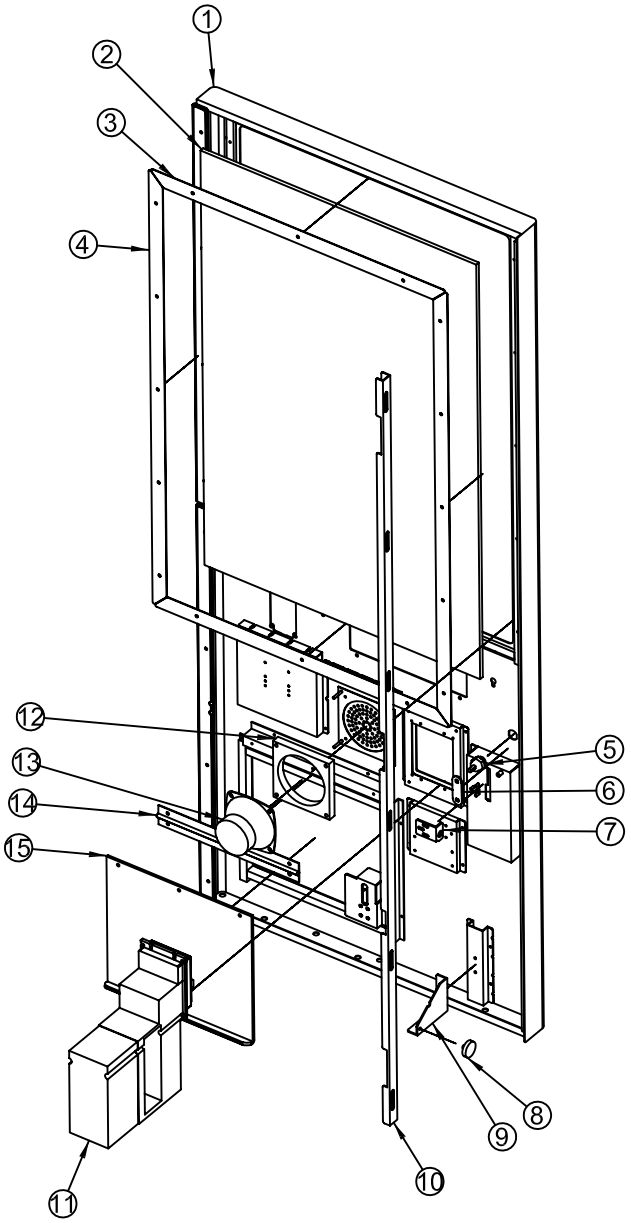

NO.	CODE NO.	QUANTITY	PART NAME	SPEC.
1	MKMM0MEP005	1	FRONT DOOR MAIN FRAME WELD ASSY(MINI)	-
2	MKMM0GLA001	1	GLASS(FRONT WINDOW GLASS MINI)	8T Tempered glass 588×890
3	MKMM0MEP011	2	FRONT WINDOW FIX BRKT B (MINI)	-
4	MKMM0MEP010	2	FRONT WINDOW FIX BRKT A (MINI)	-
5	MZZZ0KEY032	1	KEY ASS'Y 7001	7001
6	MKMM0MEP014	1	key plate(maln door lock type MINI)	-
7	MKMM0MEP012	1	FRONT DOOR LOCK KEY SUPPORT b (MINI)	SUS-3.0T
8	MALABEA001	1	BEARING	PAT42167 RW-30
9	MKEM0MEP111	1	FRONT DOOR BUNK UP BRKT A	-
10	MKMM0MEP013	1	FRONT DOOR LOCK WELD ASSY (MINI)	-
11	OPTION A	1	BILL ACCEPT AE2431D5(DOWN STACKER)	-
12	MKEM0WOO003	1	SPEAKER PANEL	
13	MZZZ0SPE004	1	SPEAKER	MID 4.5 8Ω 80W
14	MKEM0MEP007	1	PRIZE DOOR HINGE ASSY	
15	MKEM0SHE003	1	FRONT PRIZE OUT DOOR ACRYL	5T 275*310

9-5.ASSEMBLING PRIZE UP DOWN ASSY

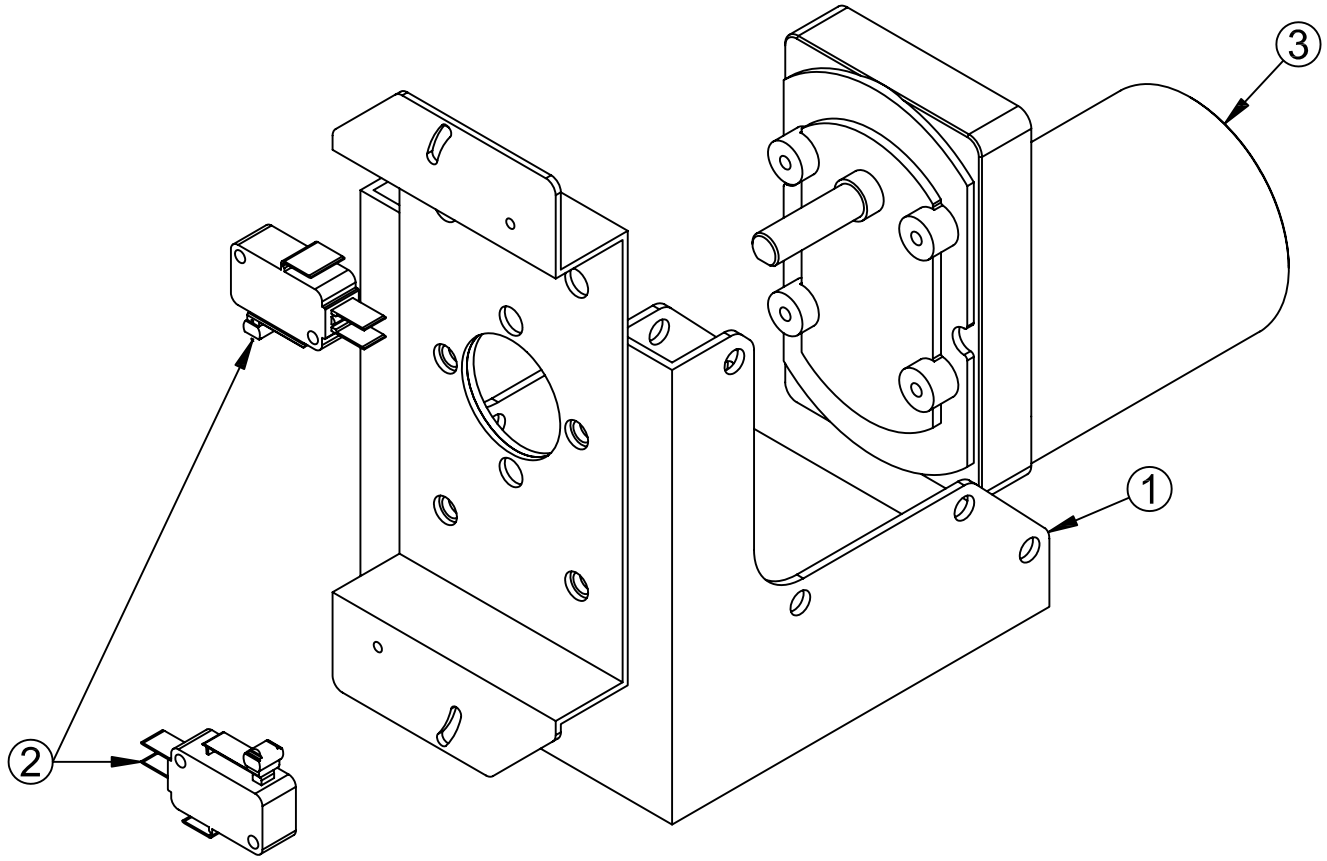

NO.	CODE NO.	QUANTITY	PART NAME	SPEC.
1	MKEM0MEP019	1	MOTOR SUPPORT BRKT WELD	-
2	MZZZ0000278	2	MICRO SWITCH(ROLL TYPE)	GSM-V1651A2
3	MTIM0MOT003	1	MOTOR	(KGY-145-K6DG15N1)

9-6.ASSEMBLING PRIZE OUT GUIDE BOX ASSY

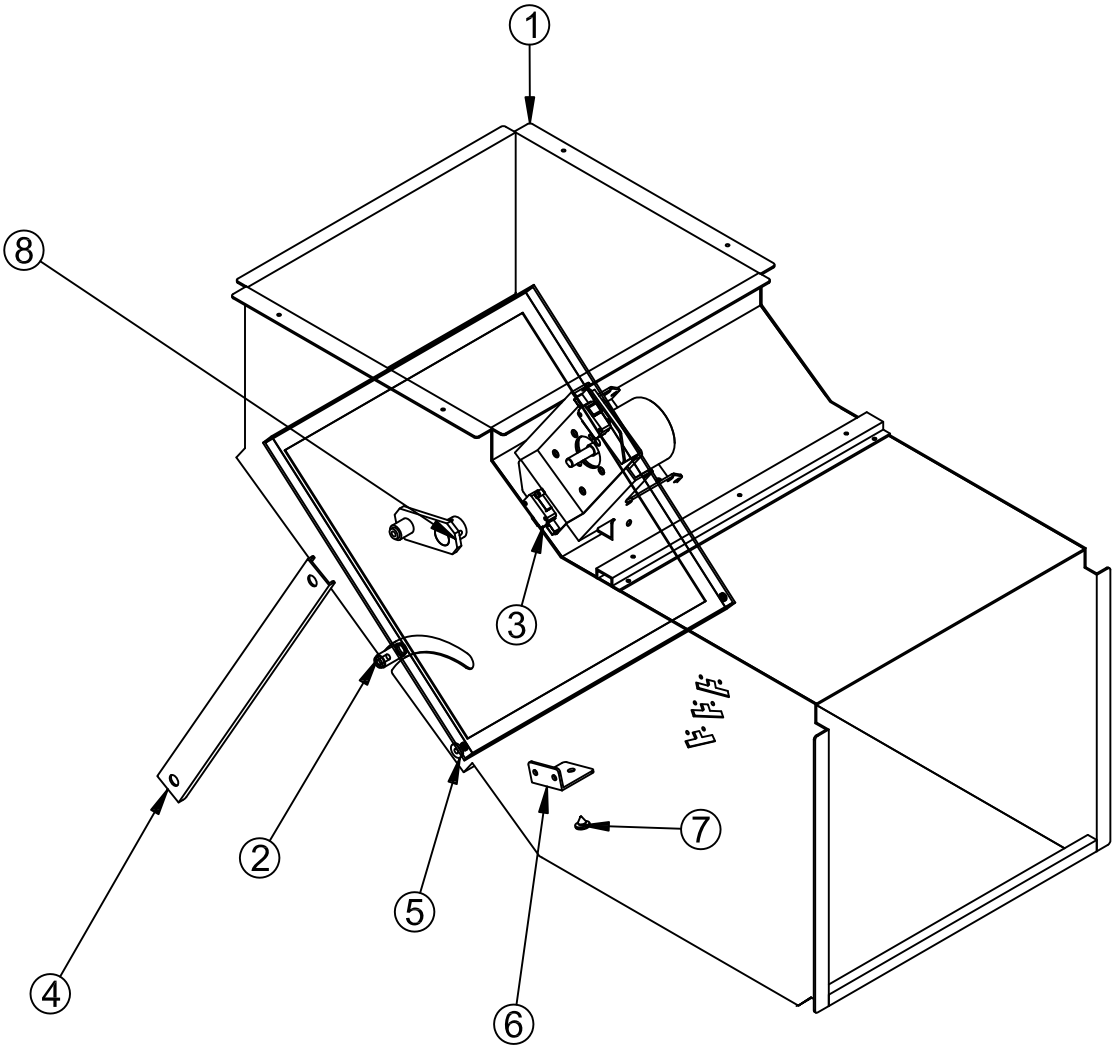

NO.	CODE NO.	QUANTITY	PART NAME	SPEC.
1	MKMM0MEP015	1	PRIZE OUT GUIDE BOX WELDING ASSY(MINI)	-
2	MKMM0MEP016	1	PRIZE OUT GUIDE DOOR WELD ASSY (MINI)	-
3	MKEM0MEP022	1	PRIZE UP DOWN ASSY	-
4	MKEM0MEP023	1	PRIZE ROTATE BRKT A	-
5	MKEM0PRO001	2	DOOR ROTATE BUSHING	-
6	MKEM0MEP025	2	DOOR STOPPER BRKT	-
7	MZZZ0RUB003	2	RUBBER (CUSHION RUBBER)	6Φ
8	MKEM0MEP026	1	DOOR ROTATE BLOCK ASSY	-

9-7.ASSEMBLING PRIZE HANGER ASSY

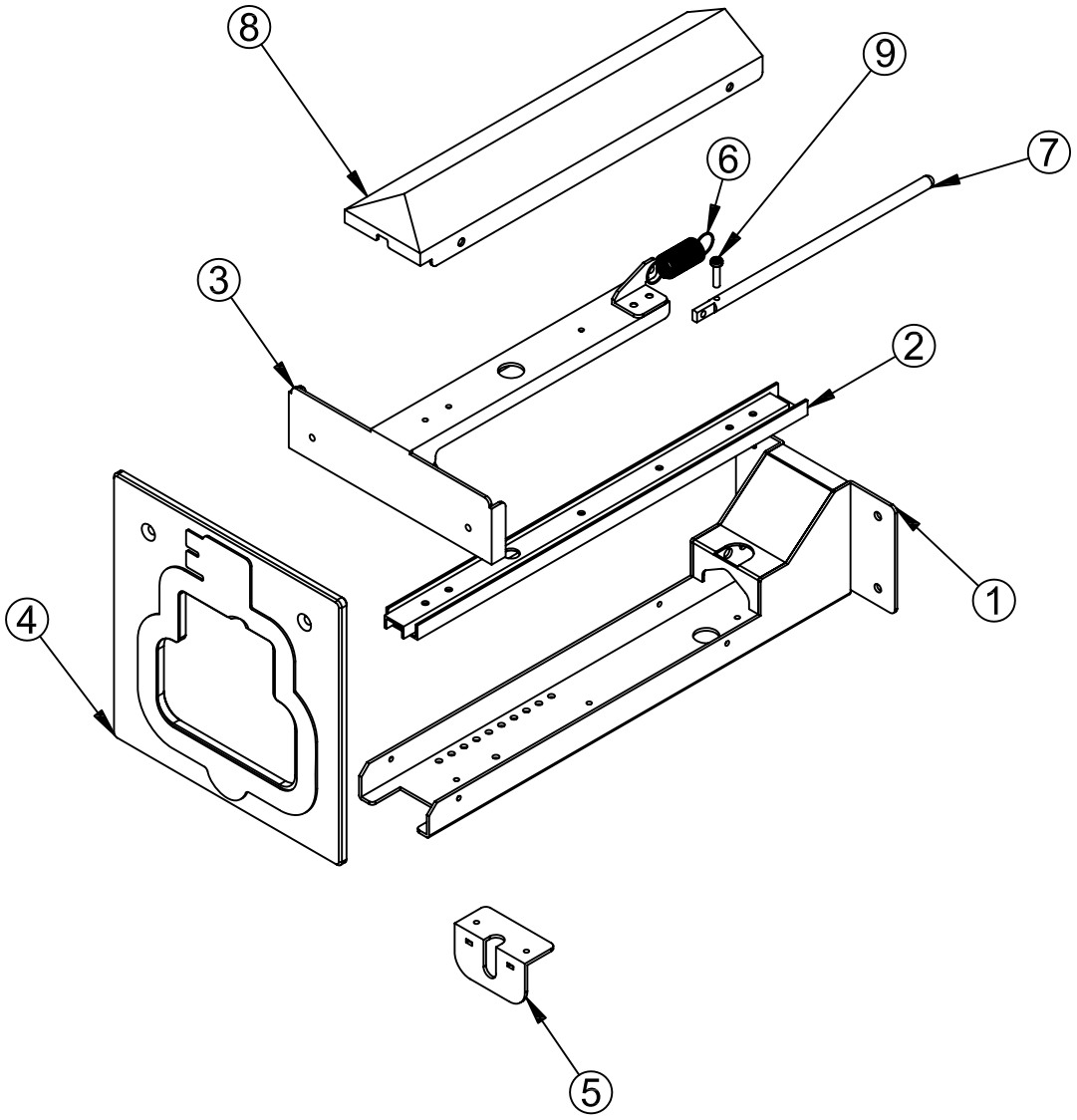

NO.	CODE NO.	QUANTITY	PART NAME	SPEC.
1	MKEM0MEP027	1	PRIZE SHOW CASE TOP BOTTOM WELD ASSY	-
2	MZZZ0000388	1	PRIZE SLIDE RAIL	SANGIN 2021-250(184mm)
3	MKEM0MEP028	1	PRIZE SHOW CASE TOP SLIDE WELD ASSY	-
4	MKEM0SHE040	1	PRIZE UPPER SLIDE ACRYL (RED SHEET)	5T 146*147
	MKEM0SHE041	1	PRIZE MIDDLE SLIDE ACRYL (BLUE SHEET)	5T 146*147
	MKEM0SHE042	1	PRIZE LOWER SLIDE ACRYL (SILVER SHEET)	5T 146*147
5	MKEM0MEP029	1	PRIZE SLIDE LOCK BRKT	-
6	MKEM0SPR001	1	SPRING(PRIZE RETURN SPRING)	(0.7MM)
7	MKEM0PRO022	1	PRIZE SLIDE LOCK DOWN SHAFT B	-
8	MKEM0MEP031	1	PRIZE SHOW CASE TOP SLIDE COVER B	-
9	-	1	BOLT M3 L12	-

9-8.ASSEMBLING PRIZE HANGER FIX ASSY

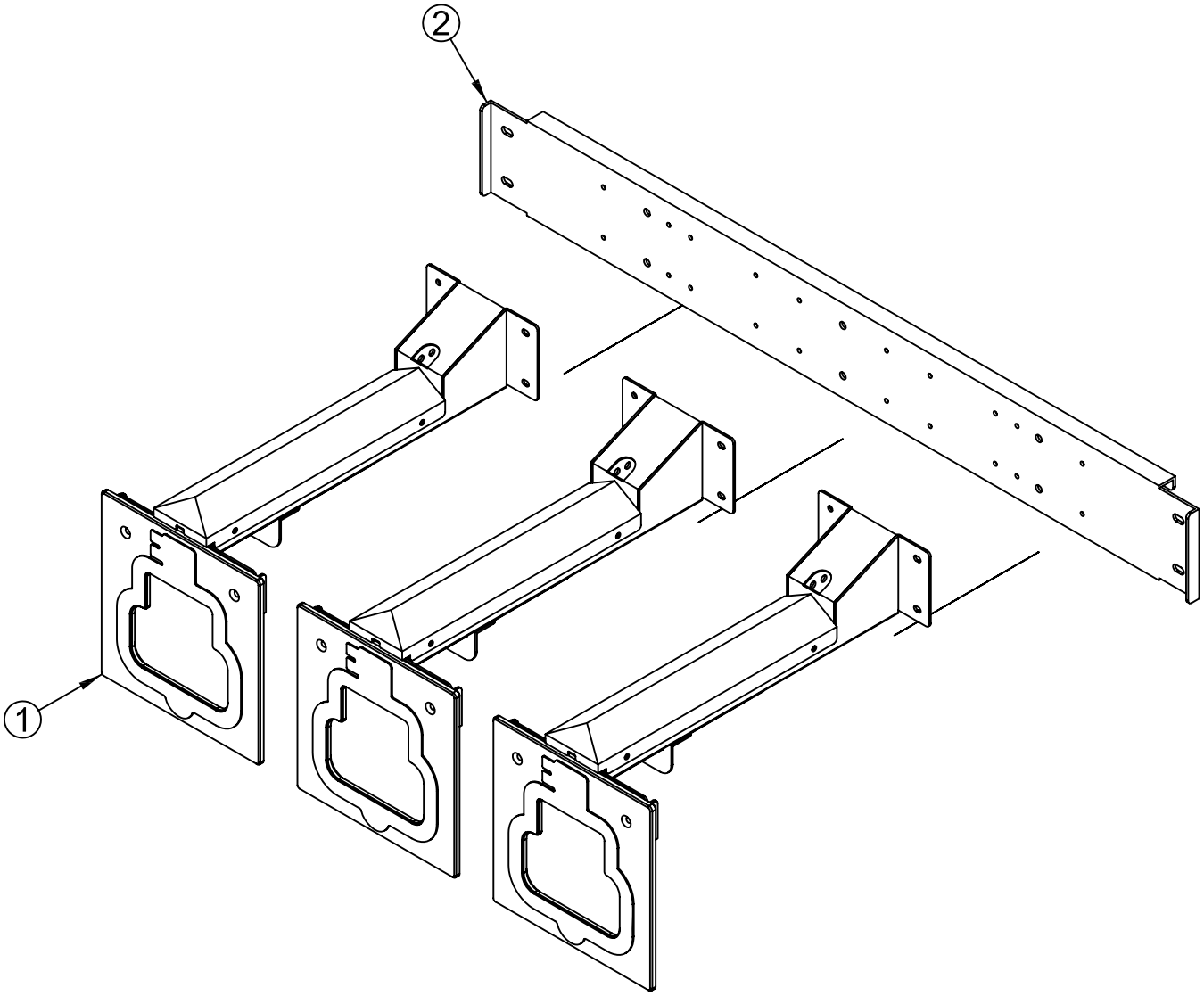

NO.	CODE NO.	QUANTITY	PART NAME	SPEC.
1	MKEM0MEP032-4	3	PRIZE HANGER UPPER ASSY (MINI)	RED
2	MKMM0MEP017	1	PRIZE SHOW CASE FIX BRKT	-

NO.	CODE NO.	QUANTITY	PART NAME	SPEC.
1	MKEM0MEP032-5	3	PRIZE HANGER MIDDLE ASSY (MINI)	BLUE
2	MKMM0MEP017	1	PRIZE SHOW CASE FIX BRKT	-

NO.	CODE NO.	QUANTITY	PART NAME	SPEC.
1	MKEM0MEP032-6	3	PRIZE HANGER LOWER ASSY (MINI)	SILVER
2	MKMM0MEP017	1	PRIZE SHOW CASE FIX BRKT	-

9-9.ASSEMBLING Z PUSH PIPE ASSY

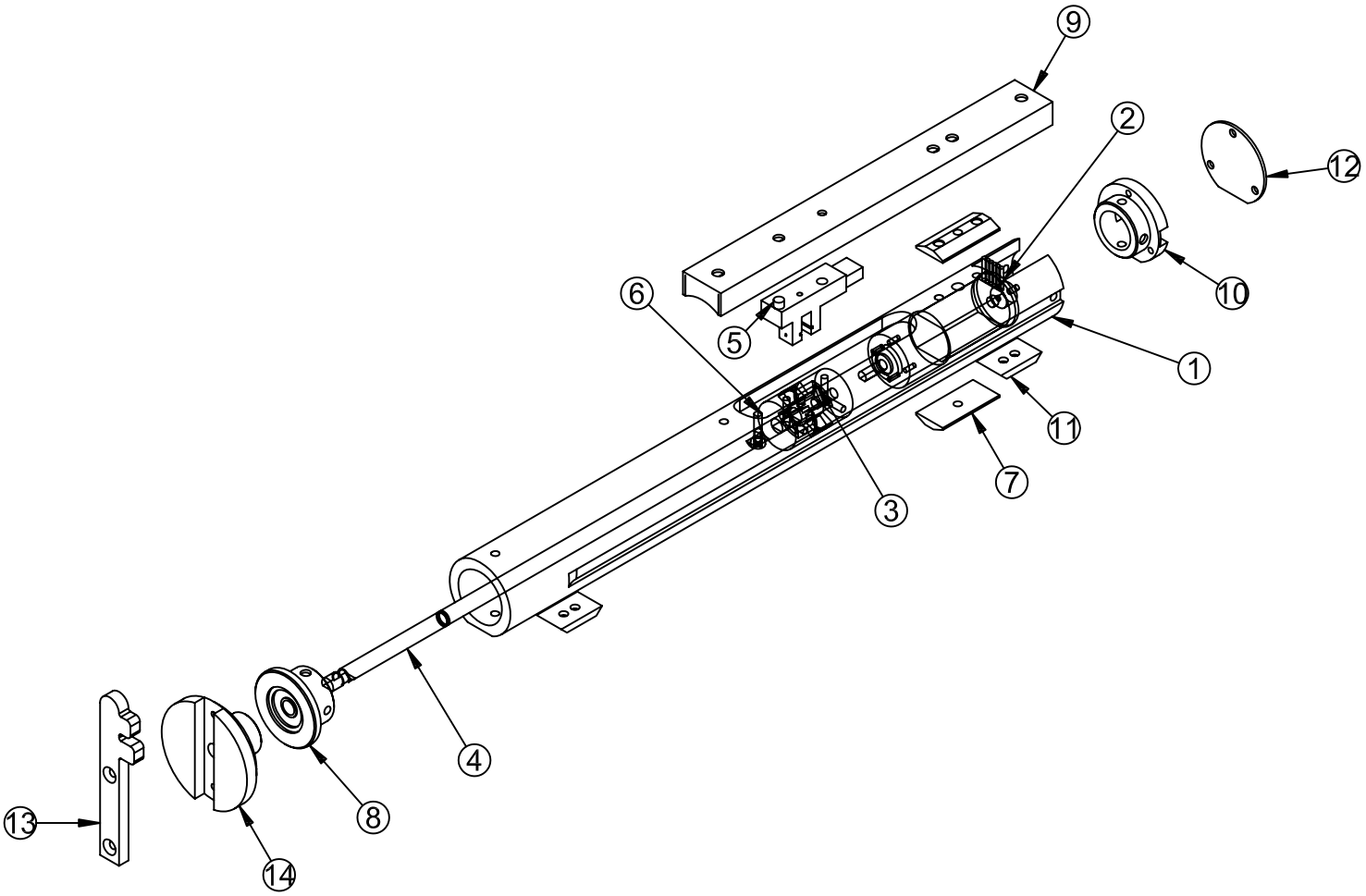

NO.	CODE NO.	QUANTITY	PART NAME	SPEC.
1	MKEM0PRO002	1	Z PUSH PIPE	-
2	MKEM0MOT005	1	MOTOR K-22 GGM	01 TYPE 1/104
3	MKEM0COU001	1	COUPLING SJC_20_GR(SET SCREW TYPE)	(D1-¥¥¥¥ 4,D2-¥¥¥¥ 6)
4	MKEM0PRO003	1	Z PUSH SHAFT A	-
5	MELE0PHO007	1	PHOTO SENSOR	LG-217L3
6	-	1	BOLT M3 L12	-
7	MKEM0PRO004	2	MOTOR HOLDER R BLOCK	-
8	MKEM0PRO005	1	Z PUSH PIPE BEARING CAP ASSY	-
9	MKEM0MEP034	1	Z PUSH PIPE SENSOR COVER A	-
10	MKEM0PRO020	1	Z PUSH PIPE CAP	-
11	MKEM0PRO006	2	Z PIPE SENSING BLOCK	-
12	MKEM0MEP035	1	Z PUSH PIPE CAP PLATE	-
13	MKEM0PRO007	1	Z PUSH PIPE KEY PLATE	-
14	MKEM0PRO008	1	Z PUSH PIPE KEY PRO	-

9-10.ASSEMBLING Z PUSH COVER ASSY

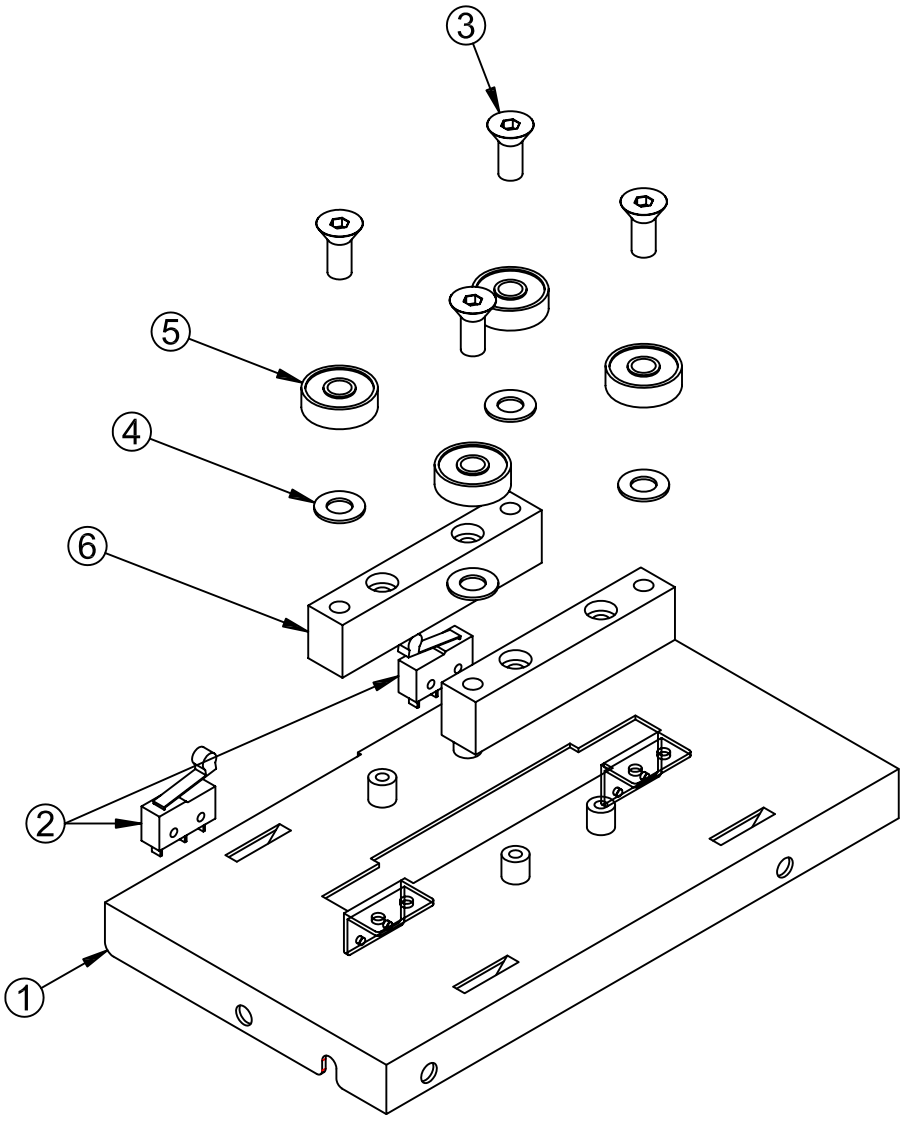

NO.	CODE NO.	QUANTITY	PART NAME	SPEC.
1	MKEM0MEP036	1	Z PUSH COVER WELD ASSY	-
2	MZZZ0000397	2	MICRO SWITCH SS-5GLT	SM1-C5H-05B0-Z
3	-	4	BOLT M6	-
4	-	4	WASHER 6Φ	-
5	MZZZ0BEA026	4	BEARING 626ZZ	626ZZ(6Φ,19Φ,T6.0)
6	MKEM0PRO009	2	Z PUSH RACK BEARING GUIDE BLOCK	-

9-11.ASSEMBLING Z PUSH MAIN BOX ASSY

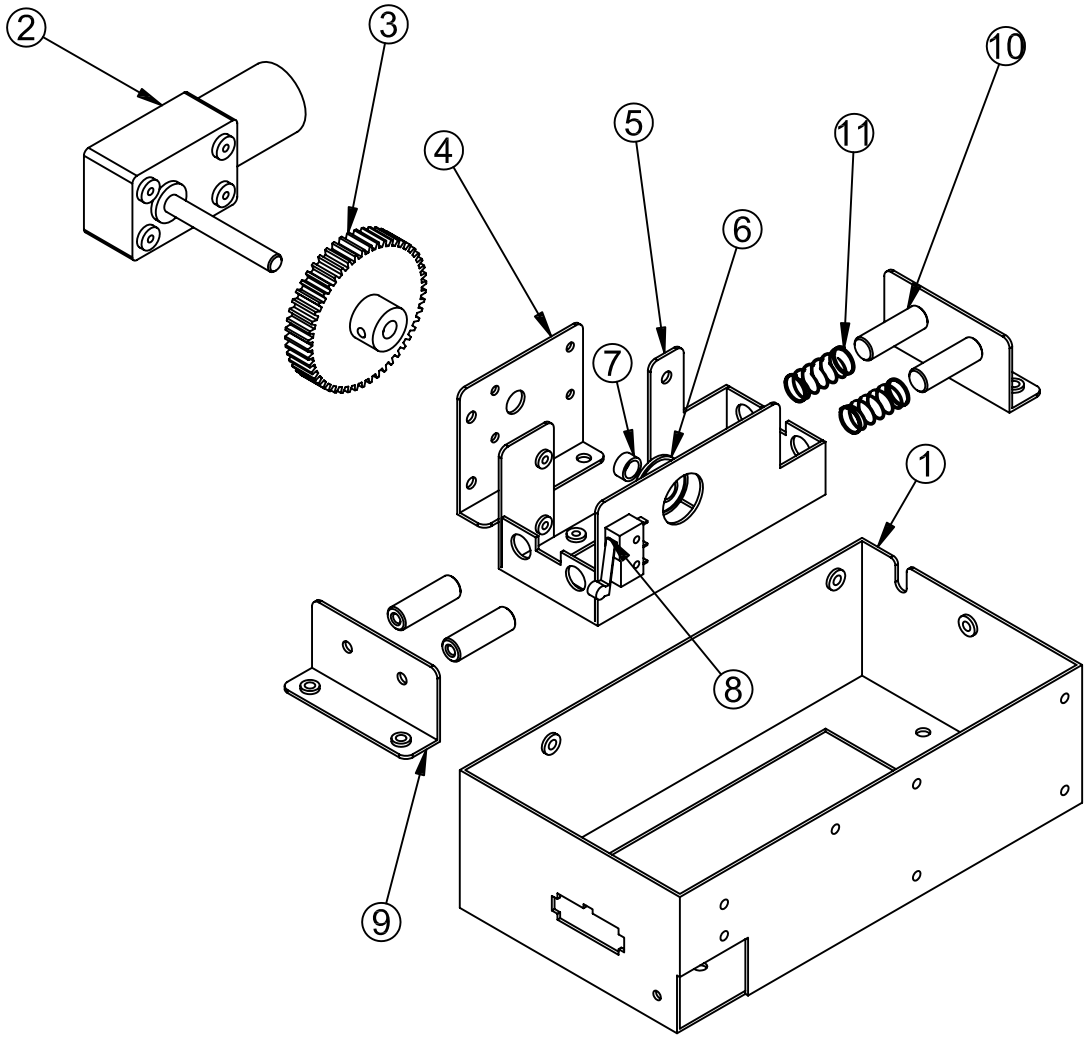

NO.	CODE NO.	QUANTITY	PART NAME	SPEC.
1	MKEM0MEP037	1	Z PUSH MAIN BOX	-
2	MKEM0MOT004	1	MOTOR (KWA-SD1-2531-090-650)	KWA-0255-2531-1
3	MKEM0PRO010	1	Z PUSH GEAR	-
4	MKEM0MEP038	1	Z PUSH MOTOR BRKT A	-
5	MKEM0MEP039	1	Z PUSH MOTOR BASE BRKT	-
6	MKEM0BEA002	1	BEARING F606ZZ	F606ZZ(D1-¥¥¥¥4,D2-¥¥¥¥6)
7	MKEM0PRO011	1	Z PUSH MOTOR BUSHING	-
8	MZZZ0000397	1	MICRO SWITCH SS-5GLT	SM1-C5H-05B0-Z
9	MKEM0MEP040	2	Z PUSH MOTOR BRKT B	-
10	MKEM0PRO012	4	Z PUSH MOTOR GUIDE SHAFT	-
11	MKEM0SPR002	2	Z PUSH MOTOR GUIDE SPRING	(0.55MM)

9-12.ASSEMBLING Z AXIS PUSH ASSY

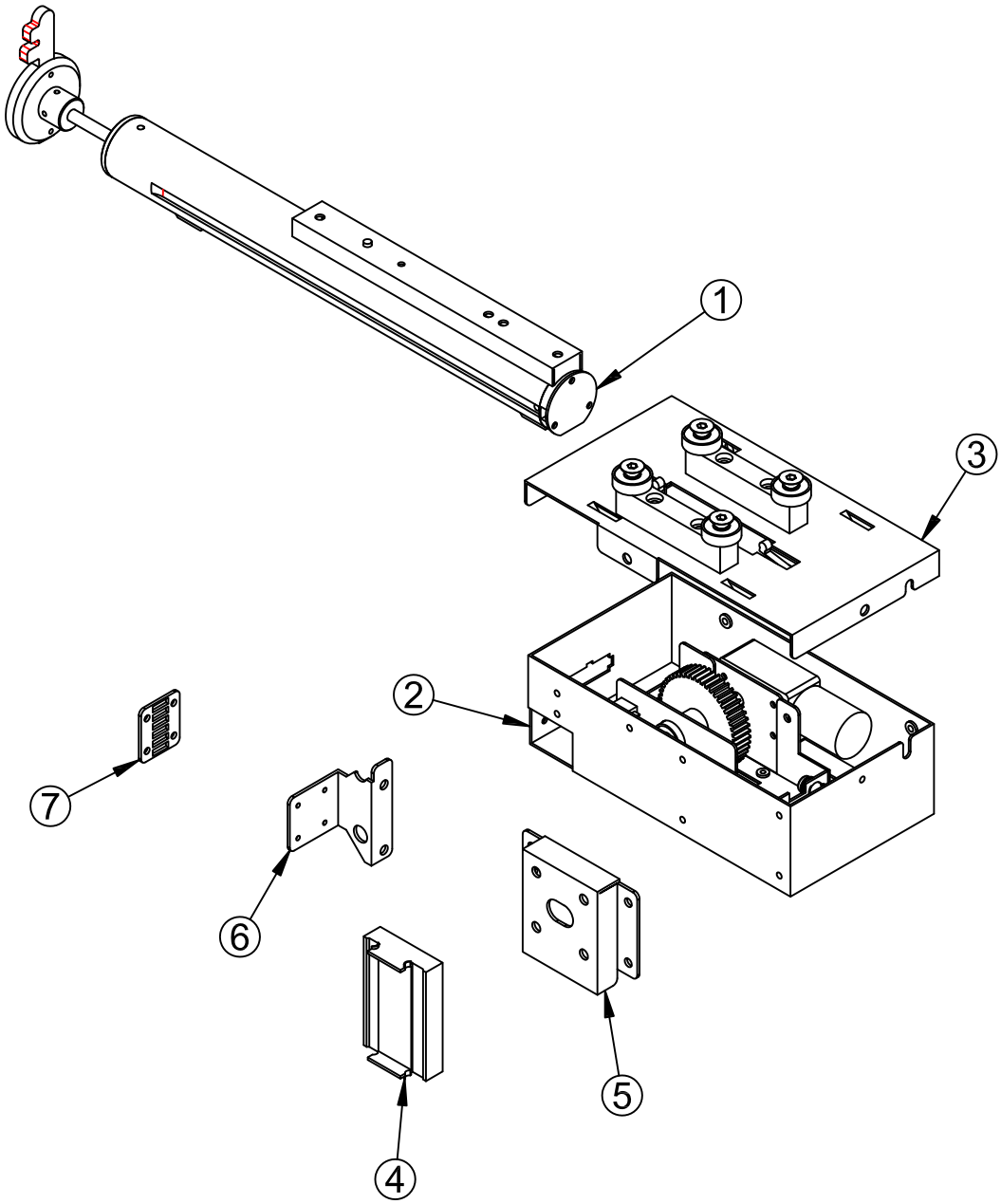

NO.	CODE NO.	QUANTITY	PART NAME	SPEC.
1	MKEM0MEP041	1	Z PUSH PIPE ASSY	-
2	MKEM0MEP042	1	Z PUSH MAIN BOX ASSY	-
3	MKEM0MEP043	1	Z PUSH COVER ASSY	-
4	MKEM0000005	1	TRI 20 GUIDE BLOCK	TRI20-1BC-800
5	MKEM0MEP044	1	TRI GUIDE BRKT A	-
6	MKEM0MEP045	1	TIMING BELT BRKT A	-
7	MKEM0MEP046	1	TIMING BELT BRKT B	-

9-13.ASSEMBLING Y AXIS UPPER ASSY

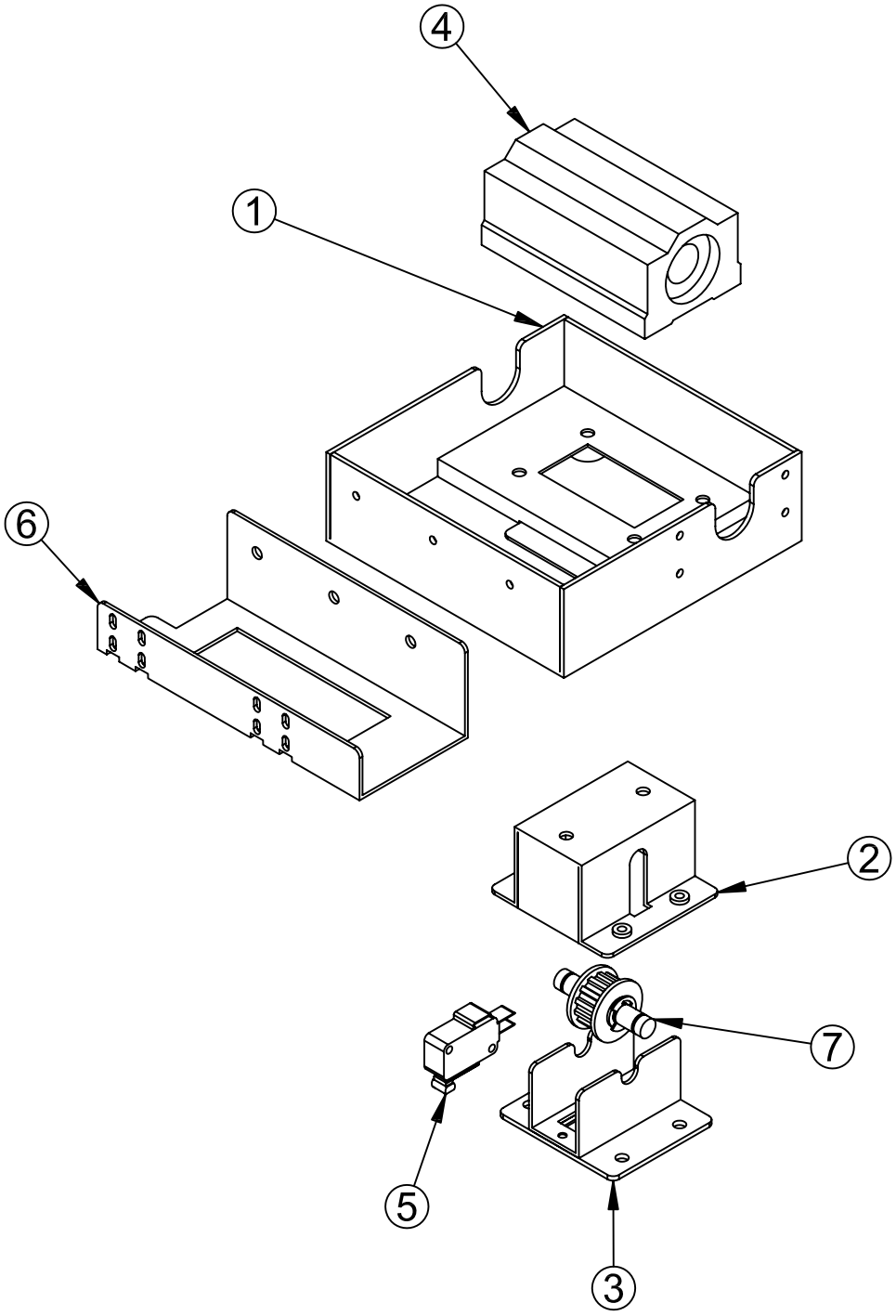

NO.	CODE NO.	QUANTITY	PART NAME	SPEC.
1	MKEM0MEP047	1	Y AXIS UPPER BASE WELD ASSY	-
2	MKEM0MEP048	1	Y BELT PULLEY ASSY	-
3	MKEM0MEP049	1	Y BELT TENSION BRKT ASSY	-
4	MKEM0BEA001	1	LM BEARING HOUSING 16UU	SC16LUU
5	MZZZ0000278	1	MICRO SWITCH(ROLL TYPE)	GSM-V1651A2
6	MKEM0MEP050	1	PRIZE FENCE BRKT B	-
7	MKEM0PRO013	1	Y BELT PULLY HOLD ASSY	-

9-14.ASSEMBLING Y STEPPING MOTOR ASSY

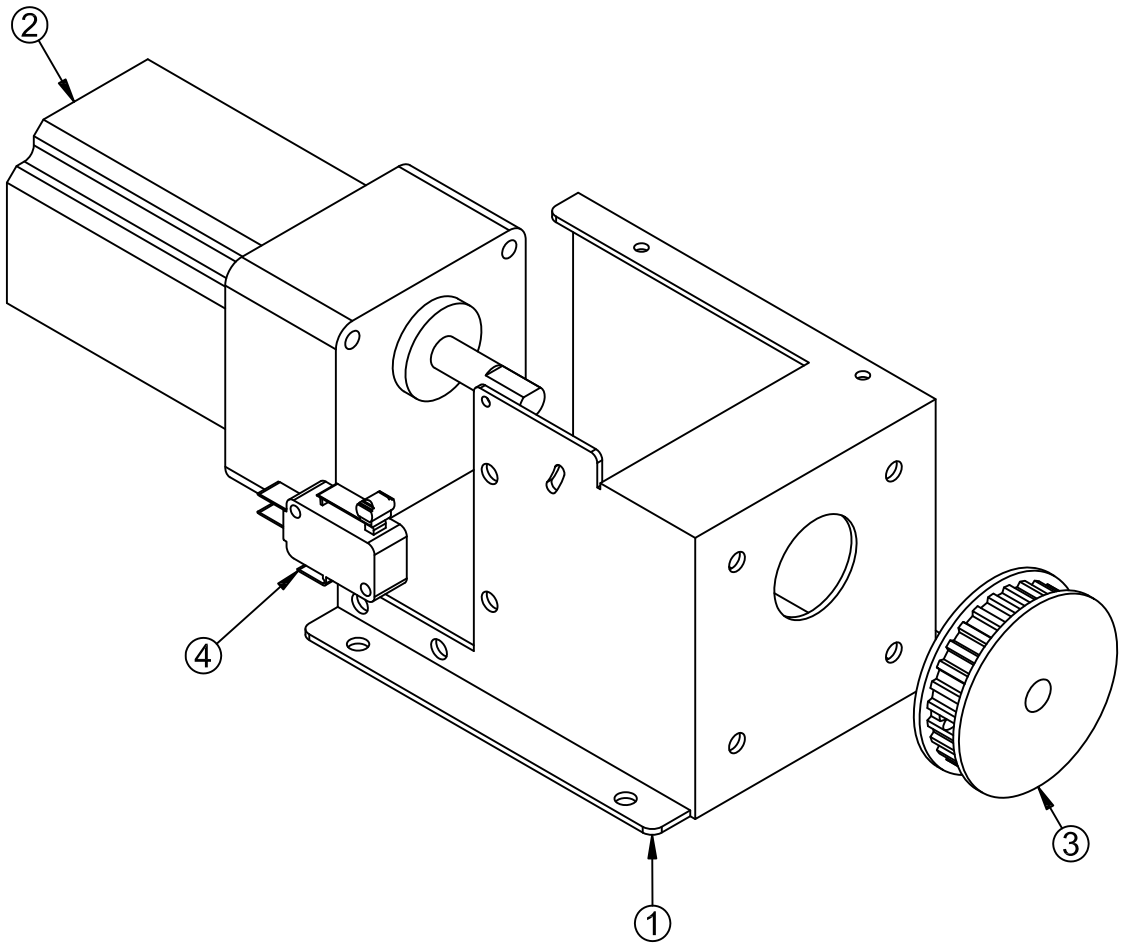

NO.	CODE NO.	QUANTITY	PART NAME	SPEC.
1	MKEM0MEP051	1	Y STEPPING MOTOR BRKT	-
2	MKEM0MOT001	1	STEPPING MOTOR	4S56Q-08254SG(HG6003-A-RD)
3	MKEM0PRO014	1	Y STEPPING MOTOR PULLEY A	-
4	MZZZ0000278	1	MICRO SWITCH(ROLL TYPE)	GSM-V1651A2

9-15.ASSEMBLING Y AXIS LOWER BASE ASSY

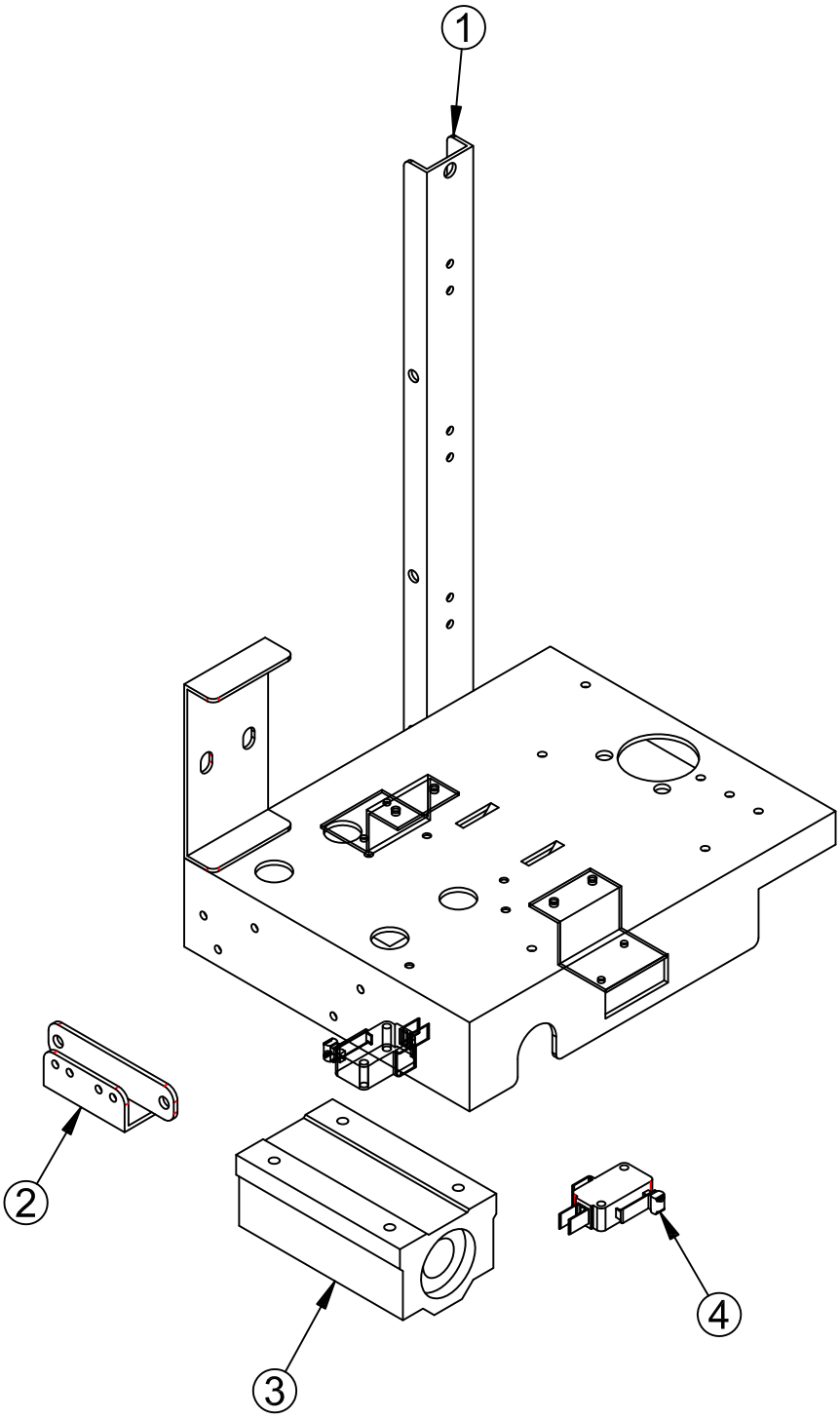

NO.	CODE NO.	QUANTITY	PART NAME	SPEC.
1	MKEM0MEP052	1	Y AXIS LOWER BASE WELD ASSY	-
2	MKEM0MEP053	1	Y AXIS LOWER BASE CABLE BRKT A	-
3	MKEM0BEA001	1	LM BEARING HOUSING 16UU	SC16LUU
4	MZZZ0000278	2	MICRO SWITCH(ROLL TYPE)	GSM-V1651A2

9-16.ASSEMBLING PRIZE FENCE ASSY

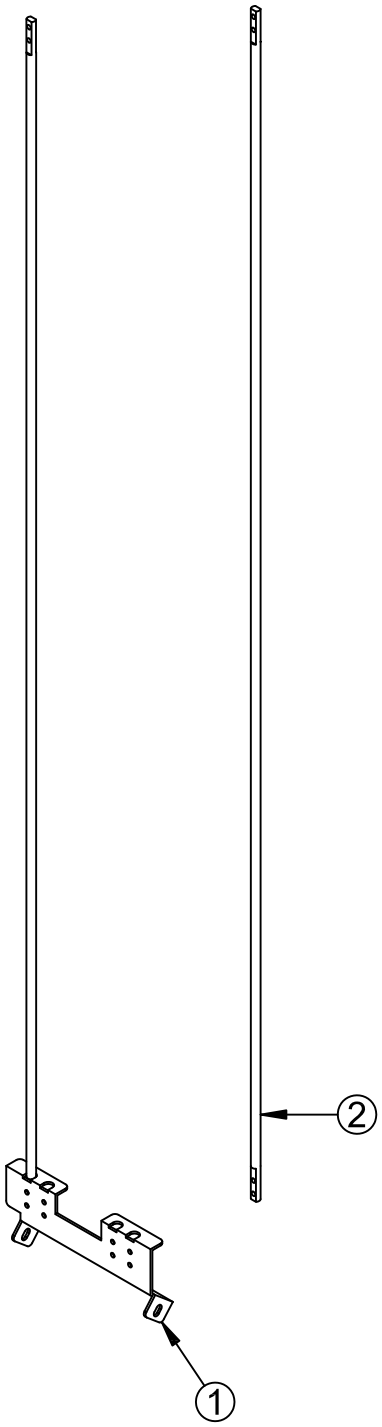

NO.	CODE NO.	QUANTITY	PART NAME	SPEC.
1	MKEM0MEP054	1	PRIZE FENCE BRKT A	-
2	MKEM0PRO015	2	PRIZE FENCE SHAFT A	-

9-17.ASSEMBLING Y AXIS ASSY

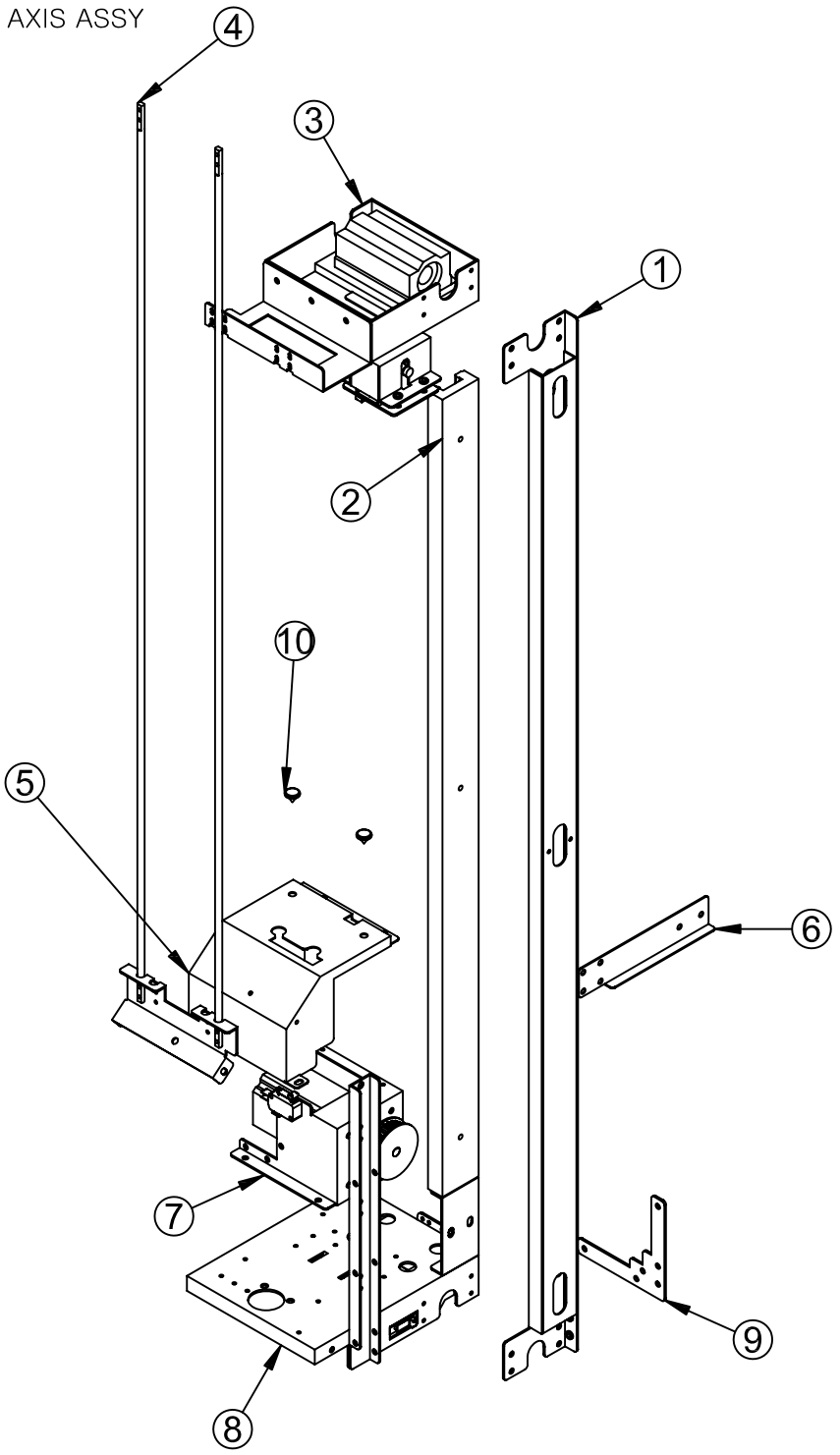

NO.	CODE NO.	QUANTITY	PART NAME	SPEC.
1	MKEM0MEP055	1	Y TRI 20 GUIDE BRKT WELD ASSY	-
2	MKEM0000021	1	TRI 20 GUIDE RAIL	TRI20-1BC-800
3	MKEM0MEP056	1	Y AXIS UPPER ASSY	-
4	MKEM0MEP057	1	PRIZE FENCE ASSY	-
5	MKEM0MEP058	1	Y STEPPING MOTOR COVER	-
6	MKEM0MEP059	1	CABLE CHAIN GUIDE BRKT	-
7	MKEM0MEP060	1	Y STEPPING MOTOR ASSY	-
8	MKEM0MEP061	1	Y AXIS LOWER BASE ASSY	-
9	MKEM0MEP062	1	X,Y ASSY FIX BRKT	-
10	MZZZ0RUB003	1	CUSHION RUBBER	6Φ

9-18.ASSEMBLING Y-Z AXIS ASSY

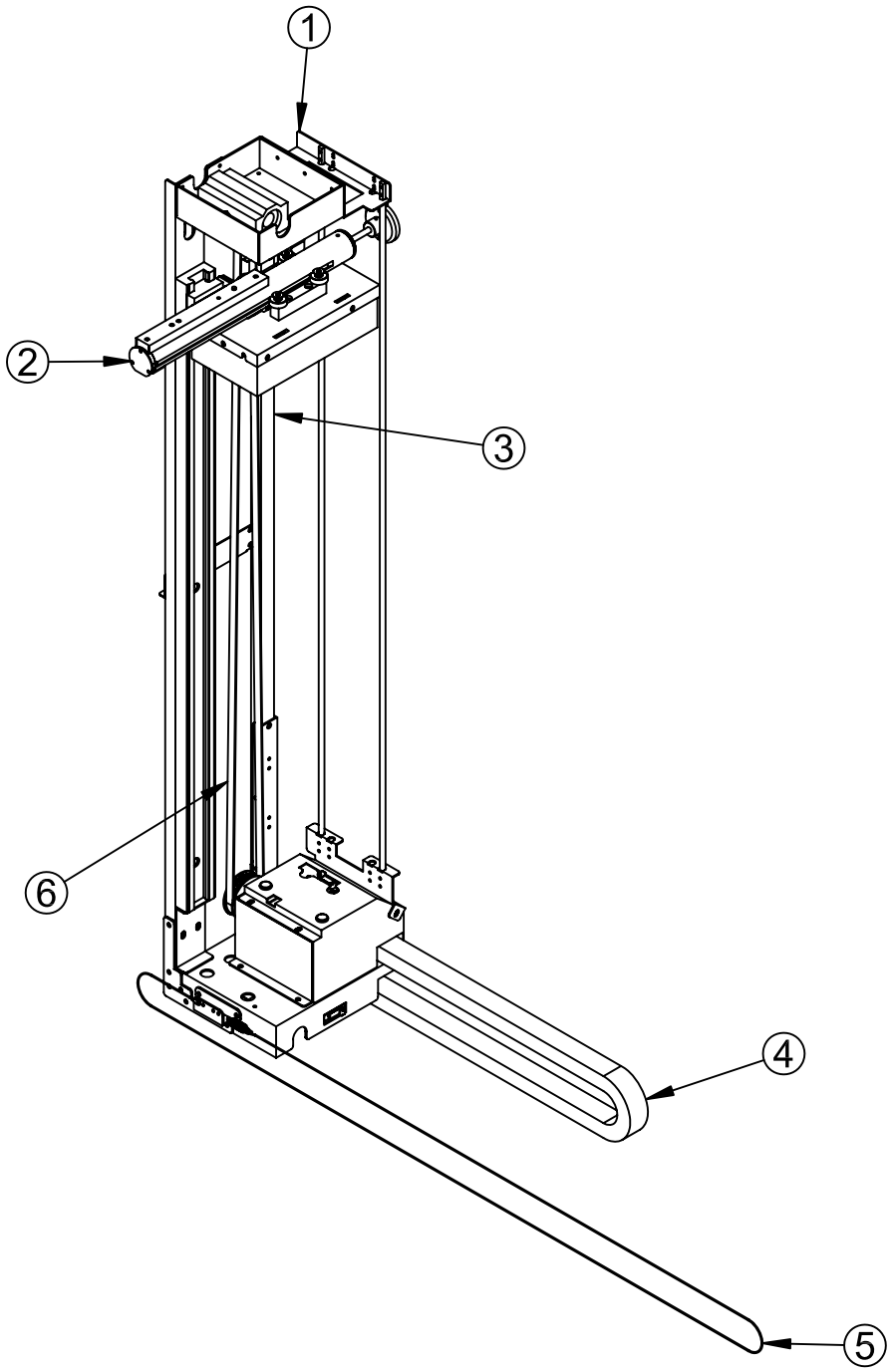

NO.	CODE NO.	QUANTITY	PART NAME	SPEC.
1	MKEM0MEP063	1	Y AXIS ASSY	-
2	MKEM0MEP064	1	Z AXIS PUSH ASSY	-
3	MKEM0CAB001	1	CABLE CHAIN KJP 0150	0150-1B R28 62LINK
4	MKMM0CAB001	1	CABLE CHAIN KJP 0180 (MINI)	0180-1B R28 36LINK
5	MKMM0WIR001	1	WIRE TENSION SPRING ASSY (MINI)	(WIRE 1.25 1220mm)
6	MKEM0BEL001	1	TIMING BELT(XL-037)	1876XL-037(OPEN XL-9.5W-U)

9-19.ASSEMBLING MC TOP LAMP ASSY

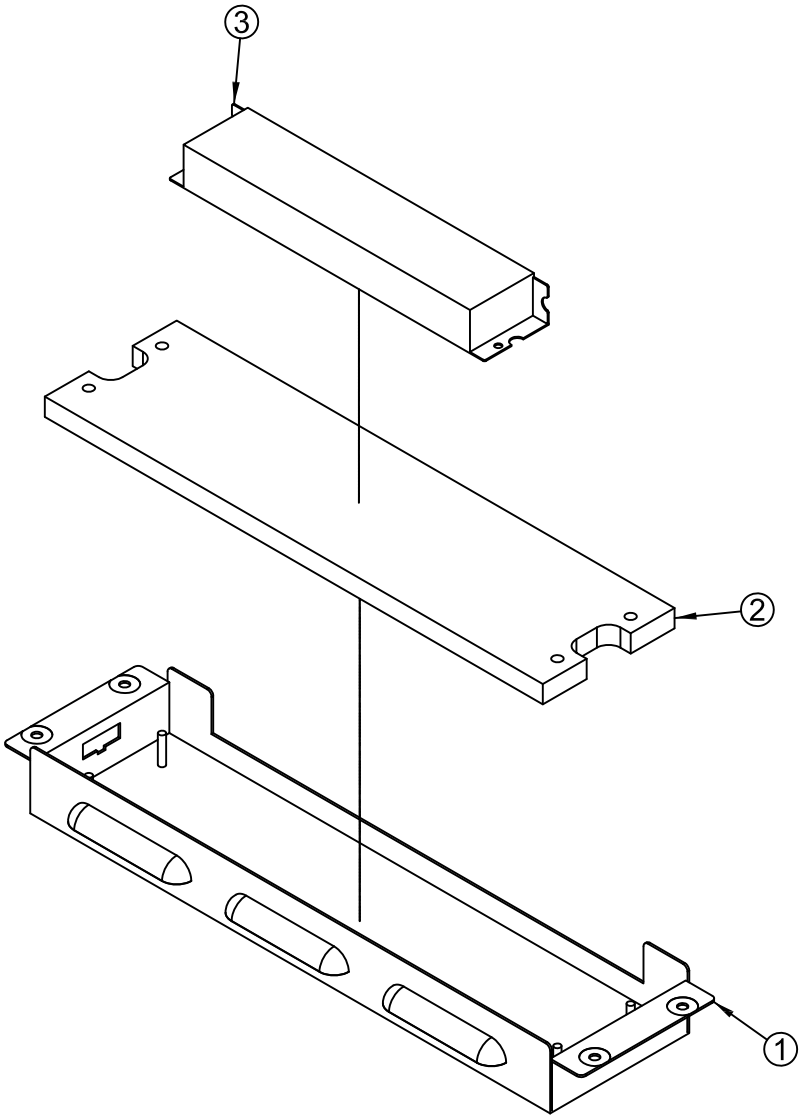

NO.	CODE NO.	QUANTITY	PART NAME	SPEC.
1	MKMM0MEP018	1	MC TOP LAMP BRKT B (MINI)	-
2	MKMM0WOO001	1	TOP LAMP PANEL (MINI)	-
3	MELE0BAL015	1	ELECTRONIC BALLAST 110/220	FULHAM WH5-120L 120V 120W
	MELE0BAL016	1		UIB-E236P 220~240V 2 LAMP

9-20.ASSEMBLING X SHAFT UPPER L BRKT ASSY

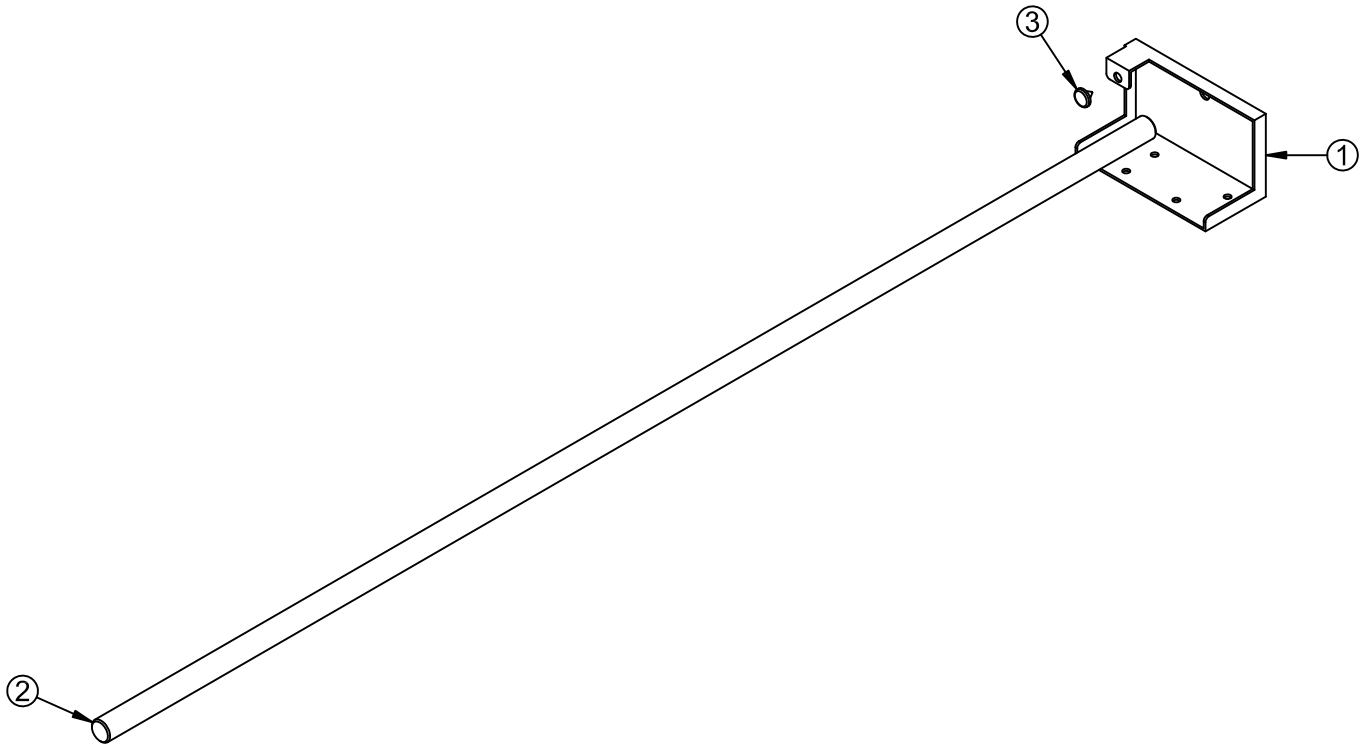

NO.	CODE NO.	QUANTITY	PART NAME	SPEC.
1	MKEM0MEP066	1	X SHAFT UPPER LBRKT	-
2	MKMM0PRO001	1	X UPPER SHAFT (MINI)	-
3	MZZZ0RUB003	1	CUSHION RUBBER	6Φ

9-21.ASSEMBLING X SHAFT L BRKT ASSY

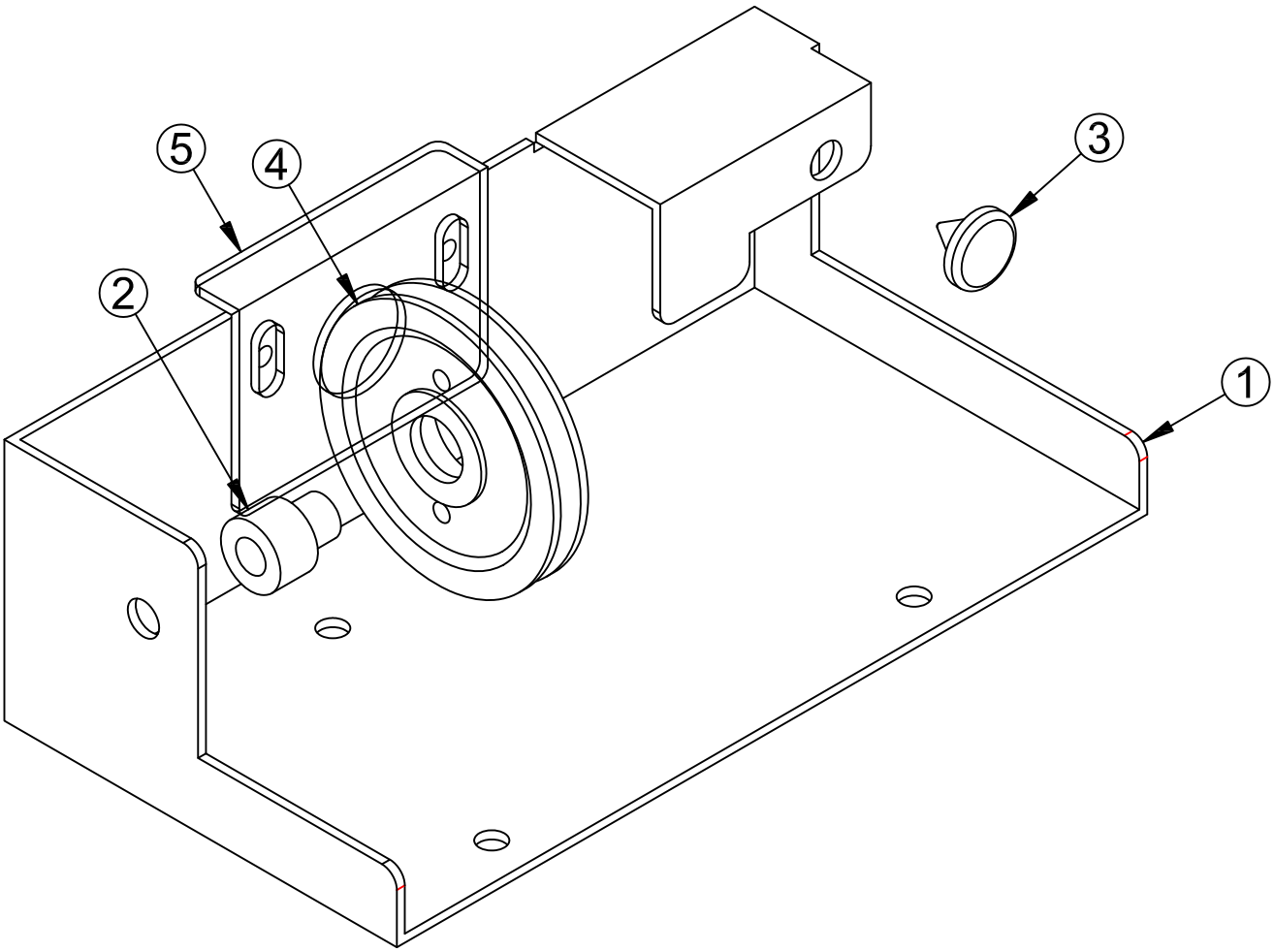

NO.	CODE NO.	QUANTITY	PART NAME	SPEC.
1	MKEM0MEP067	1	X SHAFT L BRKT	-
2	MKEM0PRO017	1	X WIRE ROLLER BUSHING	-
3	MZZZ0RUB003	1	CUSHION RUBBER	6Φ
4	MKEM0PRO018	1	X WIRE ROLLER ASSY (BEARING 696ZZ)	696ZZ
5	MKEM0MEP068	1	X SHAFT UPPER R BRKT D	-

9-22.ASSEMBLING X SHAFT R BRKT ASSY

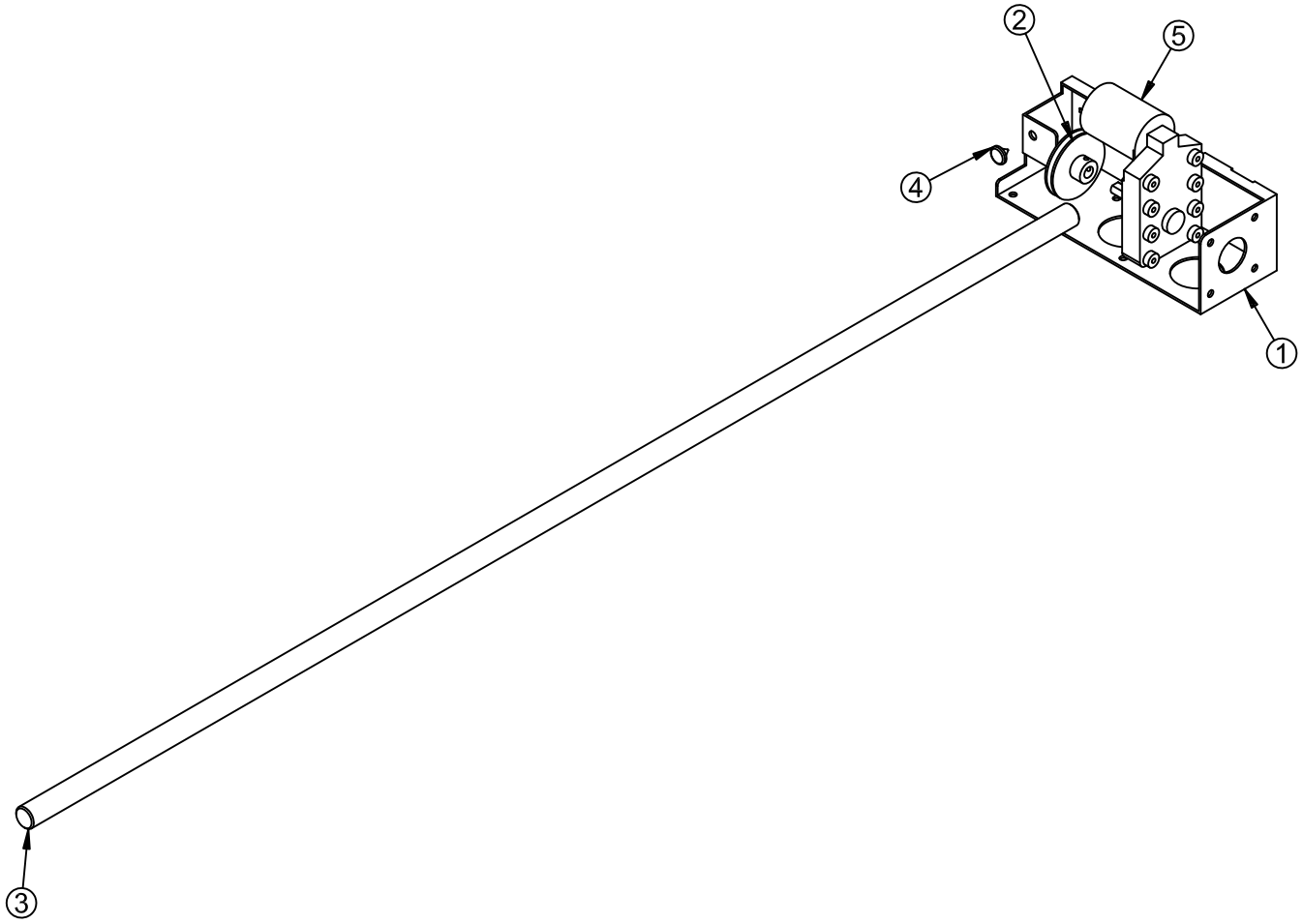

NO.	CODE NO.	QUANTITY	PART NAME	SPEC.
1	MKEM0MEP069	1	X SHAFT R BRKT	-
2	MKEM0PRO021	1	X MOTOR ROLLER B	-
3	MKMM0PRO002	1	X LOWER SHAFT (MINI)	-
4	MZZZ0RUB003	1	CUSHION RUBBER	6Φ
5	MKEM0MOT003	1	DC MOTOR	KGE-0083-3448D-SMR-03 12V

9-23.ASSEMBLING MAIN BOARD PANEL ASSY

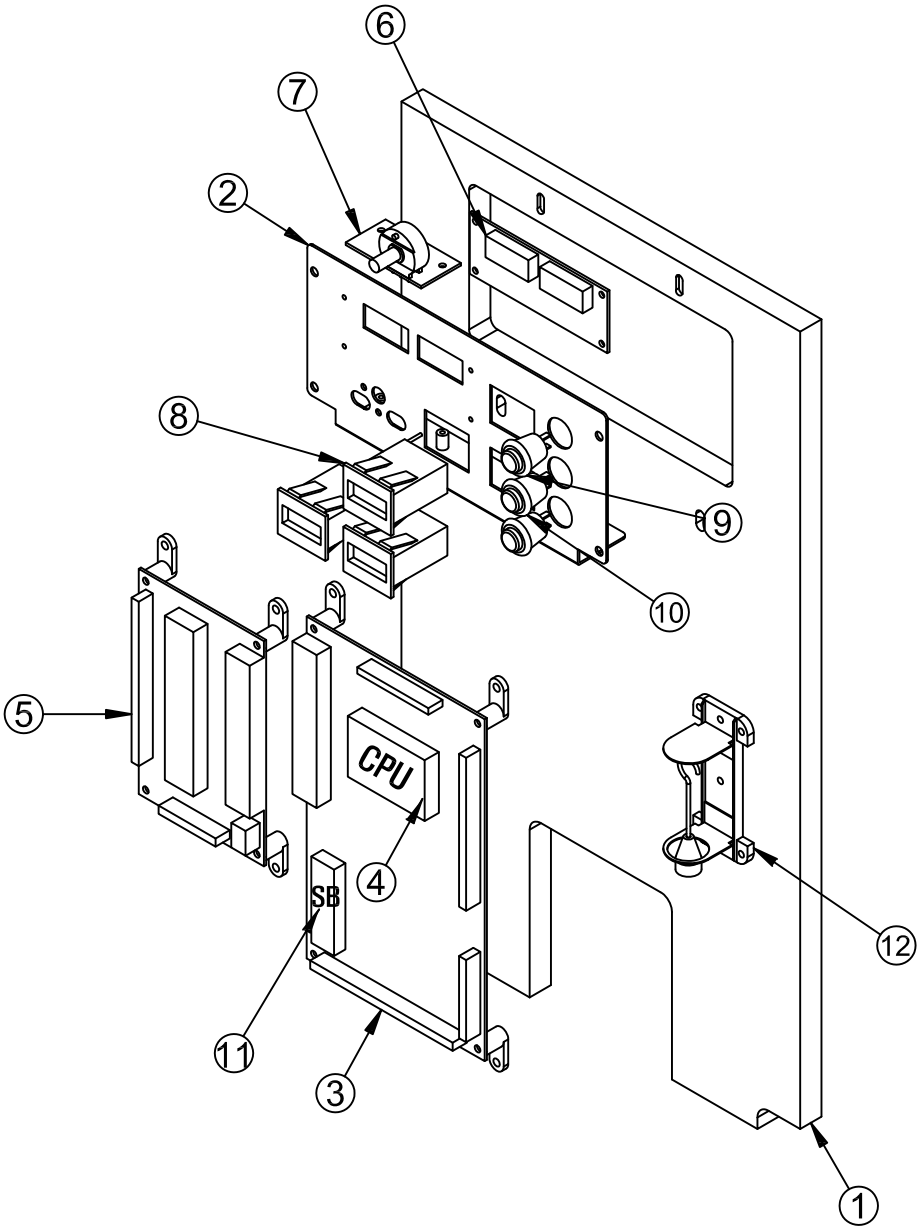

NO.	CODE NO.	QUANTITY	PART NAME	SPEC.
1	MKMM0WOO002	1	MAIN BOARD PANEL (MINI)	-
2	MKEM0MEP071	1	CONTROL PANEL BRKT	-
3	ACRM0PCB001	1	MAIN BOARD PCB	KEY MASTER
4	AKEM0PCB017	1	CPU BOARD	KEY MASTER (MINI)
5	AKEM0PCB001	1	IO BOARD	KEY MASTER
6	AALA0PCB004	1	SETUP FND BOARD	KEY MASTER
7	AMUN0PCB003	1	VR-BOARD-VR-080125	KEY MASTER
8	MZZZ0COU002	3	COUNTER	AMMC-712(OA127CL)
9	MELE0PUS001	1	PUSH BUTTON SWITCH-R	412R
10	MELE0PUS002	2	PUSH BUTTON SWITCH-W	412W
11	AKEM0PCB011	1	SOUND BOARD	KEY MASTER
12	MZZZ0000429	1	TILT ASSY	KM-001(PLASTIC)

9-24.ASSEMBLING POWER PANEL ASSY

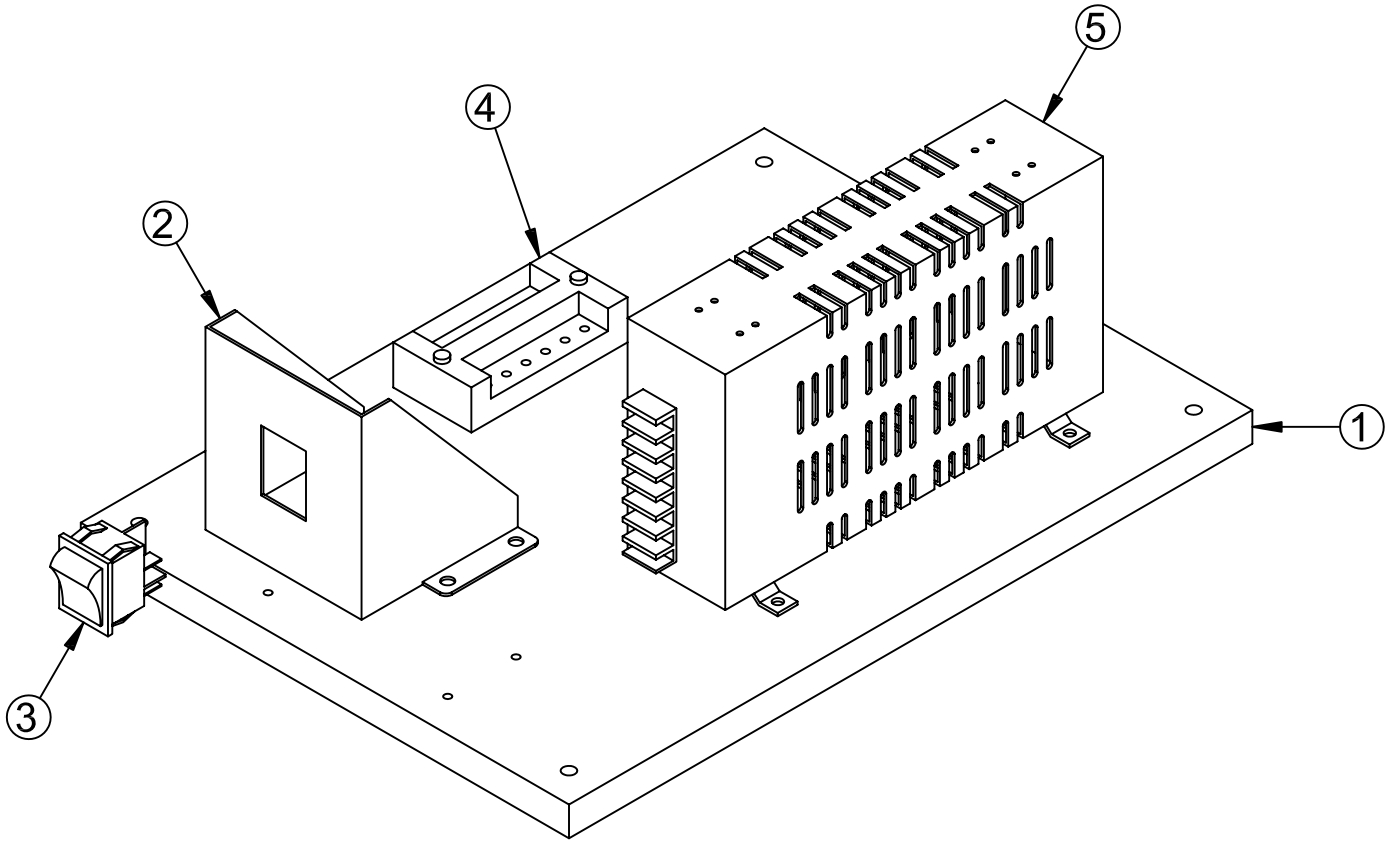

NO.	CODE NO.	QUANTITY	PART NAME	SPEC.
1	MKEM0WOO006	1	POWER PANEL	-
2	MKEM0MEP072	1	AC POWER SWITCH BRKT (AC INPUT NOISE FILTER BRKT)	-
3	MELE0SWI004	1	ROCKER SWITCH	T-125 4P
4	MELE0TEB001	1	TERMINAL BLOCK	6P UL
5	MELE0SMP018	1	POWER-SMPS CSR028A	DC5V-8A 12V-7A
	MELE0SMP008	1	POWER-SMPS (UK ONLY)	MSF 60-BDW,5V-4A,12V-3A

9-25.ASSEMBLING MAIN CABINET ASSY A

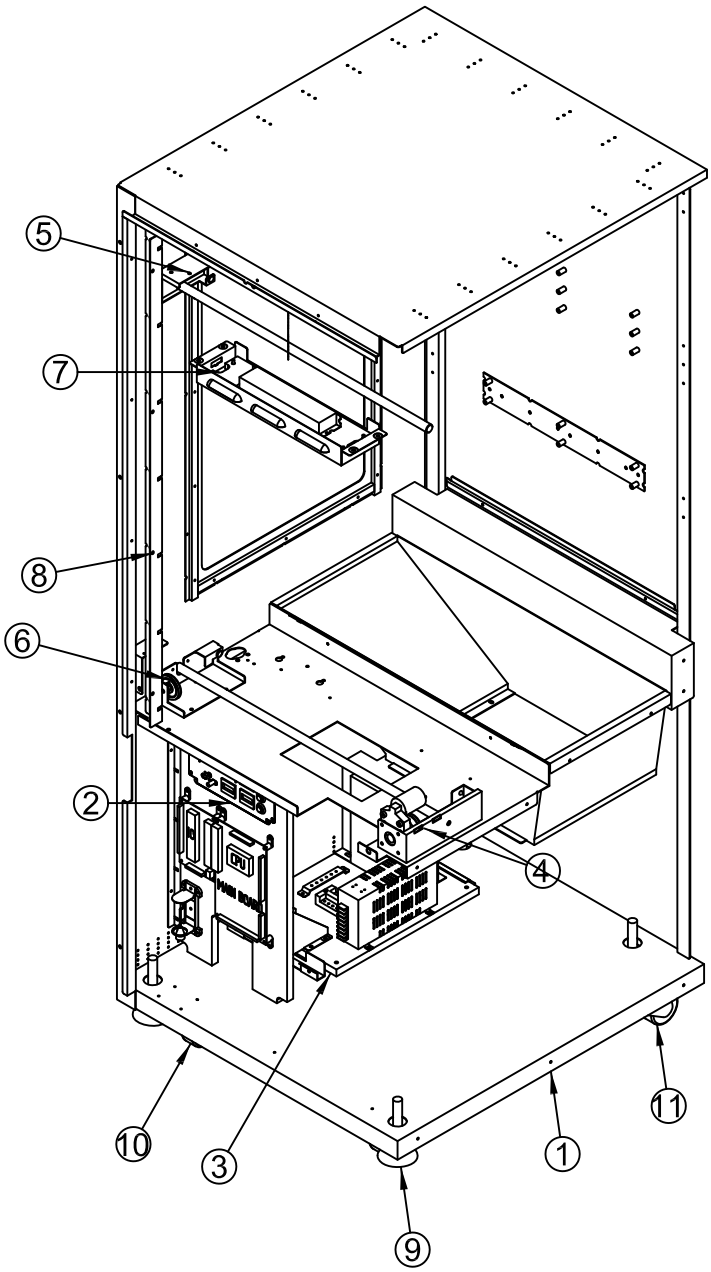

NO.	CODE NO.	QUANTITY	PART NAME	SPEC.
1	MKMM0MEP019	1	MAIN CABINET WELD ASSY (MINI)	-
2	MKMM0MEP020	1	MAIN BOARD PANEL ASSY (MINI)	-
3	MKEM0MEP088	1	POWER PANEL ASSY	-
4	MKMM0MEP021	1	X SHAFT R BRKT ASSY (MINI)	-
5	MKMM0MEP022	1	X SHAFT UPPER L BRKT ASSY (MINI)	-
6	MKEM0MEP083	1	X SHAFT L BRKT ASSY	-
7	MKMM0MEP023	1	MC TOP LAMP ASSY (MINI)	-
8	MKMM0MEP024	1	HARNESS BRKT(T5 LAMP BRKT) (MINI)	
9	MZZZ0CAS005	4	STOPPER	LEVELING FOOT STEEL M16X125L
10	MZZZ0CAS011	2	CASTER (ROTATE)	2.5"
11	MZZZ1100012	2	CASTER (FIXED)	2.5"

9-26.ASSEMBLING MAIN CABINET ASSY B

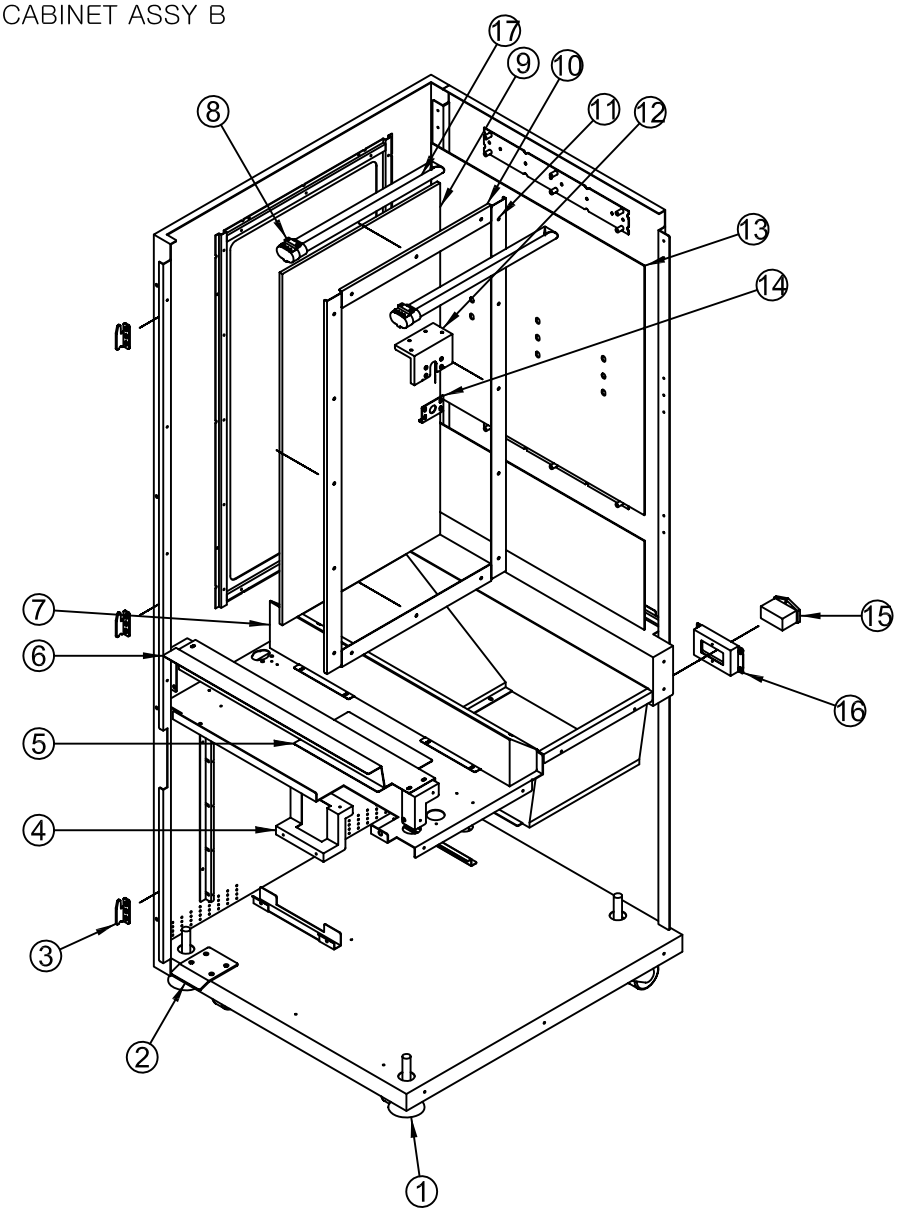

NO.	CODE NO.	QUANTITY	PART NAME	SPEC.
1	MKMM0MEP019	1	MAIN CABINET WELD ASSY (MINI)	-
2	MKMM0MEP025	1	FRONT DOOR BUNK UP BRKT B (MINI)	-
3	MKEM0MEP093	3	MC FRONT DOOR LOCK HOLD BRKT	-
4	MKMM0MEP026	1	MIDDLE BASE MAIN SUPPORT BRKT (MINI)	-
5	MKEM0MEP091	1	MAIN CABINET INNER PLATE	-
6	MKMM0MEP027	1	CABINET INNER COVER A (MINI)	-
7	MKMM0MEP028	1	PRIZE OUT GUIDE FRONT ANGLE (MINI)	-
8	MZZZ0000371	2	PL RECEPTACLE	Socket"I" TYPE + SUS loop
9	MKEM0GLA002	2	MC SIDE WINDOW GLASS	8T Tempered glass 432×832
10	MKEM0MEP094	4	MC SIDE WINDOW FIX BRKT A	
11	MKEM0MEP095	4	MC SIDE WINDOW FIX BRKT B	
12	MKEM0MEP097	1	X SHAFT UPPER R BRKT B	-
13	MKMM0ACR001	1	MIRROR ACRYL	2T MIRROR 867*807.8
14	MKEM0MEP096	1	X SHAFT UPPER R BRKT C	-
15	MKEM0MEP089	1	NOISE FILTER BRKT(AC NOISE BRKT)	-
16	MELE0NOI002	1	NOISE FILTER	IP-0642-H2
17	MMSTOELE006	2	LAMP PL	36W

9-27.ASSEMBLING KEY MASTER ALL FIX ASSY

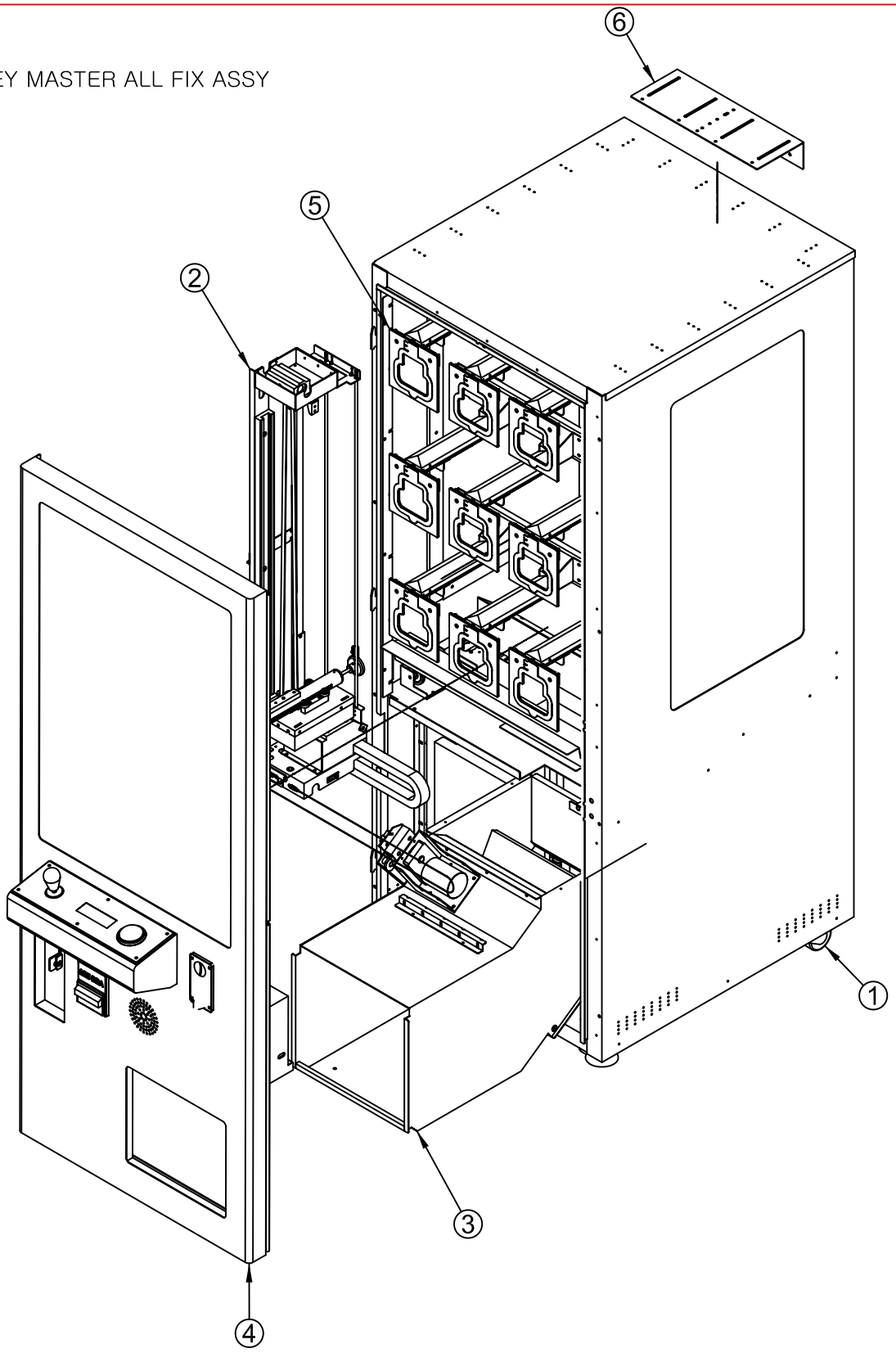

NO.	CODE NO.	QUANTITY	PART NAME	SPEC.
1	MKMM0MEP029	1	MAIN CABINET ASSY (MINI)	-
2	MKMM0MEP030	1	Y-Z AXIS ASSY (MINI)	-
3	MKMM0MEP031	1	PRIZE OUT GUIDE BOX ASSY (MINI)	-
4	MKMM0MEP032	1	FRONT DOOR MAIN FRAME ASSY (MINI)	-
5	MKMM0MEP033	3	PRIZE HANGER FIX ASSY (MINI)	-
6	MKMM0MEP034	1	MAIN CABINET WALL FIX BRKT (MINI)	-

10 PERIODIC INSPECTION

The items listed below require periodic check and maintenance to retain the performance of this machine and to ensure safe business operation.
When handling the controller, the player will be in direct contact with it. In order to always allow the player to enjoy the game, be sure to clean it regularly. Also, it is advisable to provide wet tissue, etc. available for player use.

⚠ CAUTION

- **It is important for the operation of the game that the KEY mechanism is calibrated and remains calibrated at all times. It is therefore recommended that AUTO CALIBRATION MODE is carried out weekly.**
- **It is also recommended that AUTO CALIBRATION MODE is performed after the vend of every major prize.**
- **If the machine is moved or bumped then an AUTO CALIBRATION MODE should be carried out.**
- **Failure to perform AUTO CALIBRATION MODE after these events may result in a false vend and may reduce the performace of the game.**
- **For details on calibration methods please refer to section 6.2 of this manual.**

⚠ WARNING

- **Do not use a water jet (high pressure washing device) or hose to clean this product. It was not designed to be cleaned by a water jet. Water could get inside and cause electrocution or short circuits. The product could also be damaged in such a way that it is difficult to repair.**

Periodic Inspection Table

PERIOD	ITEMS	DESCRIPTION
As appropriate	CABINET SURFACE	Cleaning
	LAMPS	Inspection
Daily	CABINET	Confirm adjusters contact floor
		Check openings for debris
Weekly	X Y MECHANISM	Operation
		Calibration
	PRIZE ARMS & PRIZES	Check condition/Location
Monthly	CABINET	Check Internal lighting
	CONTROLLER	Inspect condition
		Check operation
	COIN SELECTOR	Coin switch inspection
		Coin insertion test
Every 3 Months	X Y MECHANISM	Inspect gear meshing
		Apply grease
	CABINET	Check/Clean Ext Fans
		Check system settings
	COIN SELECTOR	Cleaning
1 year	CPU & PSU	Cleaning
	POWER PLUG	Inspection, Cleaning
	CABI INTERIOR	Cleaning

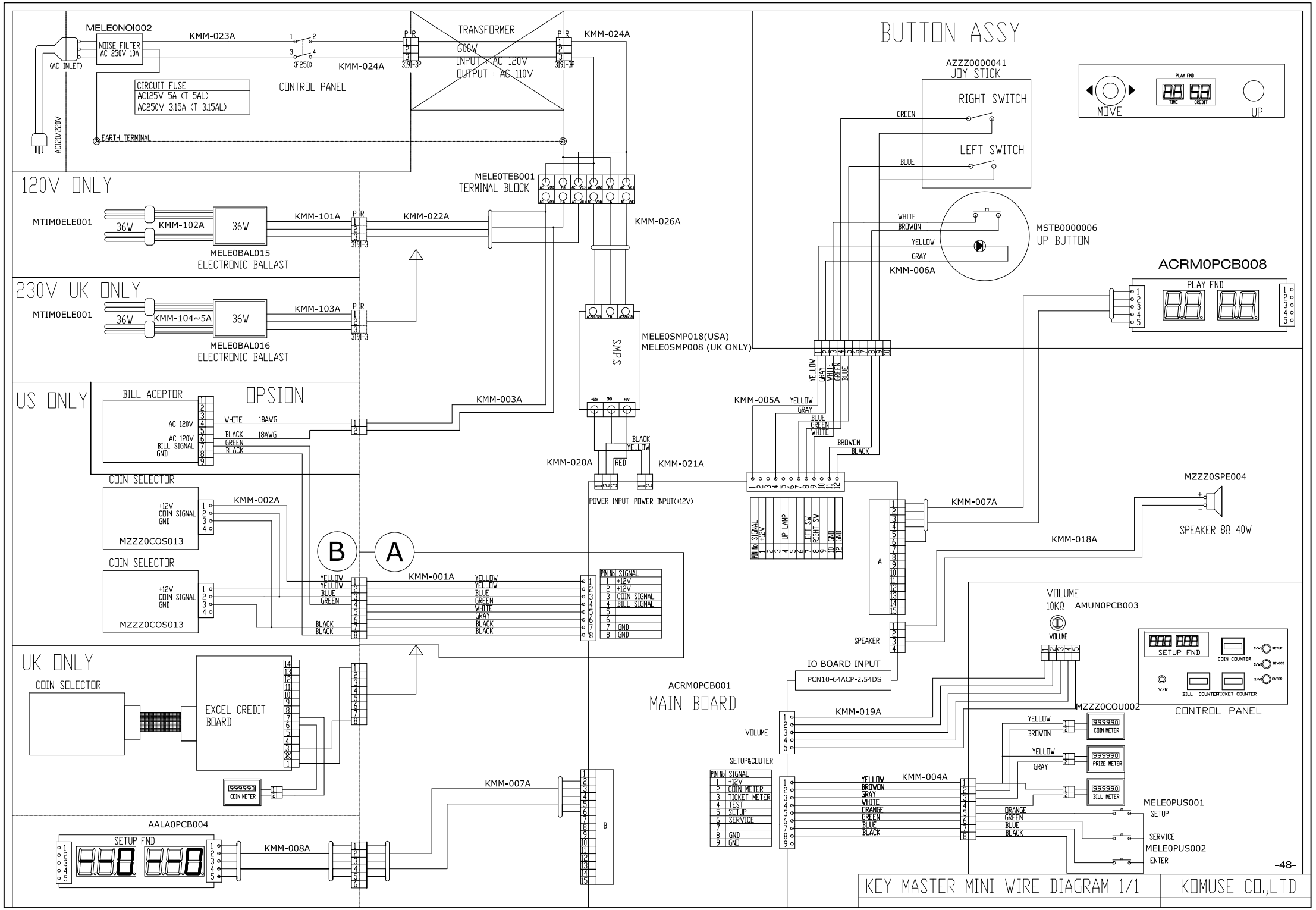
MELEONOI002
NOISE FILTER
AC 250V 10A
(AC INLET)
KMM-023A
(F250)
KMM-024A
TRANSFORMER
600W
INPUT : AC 120V
OUTPUT : AC 110V
KMM-024A
CIRCUIT FUSE
AC125V 5A (T 5AL)
AC250V 3.15A (T 3.15AL)
CONTROL PANEL
AC120/220V
EARTH TERMINAL
BUTTON ASSY
AZZZ0000041
JOY STICK
RIGHT SWITCH
LEFT SWITCH
GREEN
BLUE
MOVE
PLAY FND
TIME
CREDIT
UP
120V ONLY
MTIM0ELE001
36W
KMM-102A
36W
KMM-101A
KMM-022A
MELE0BAL015
ELECTRONIC BALLAST
MELE0TEB001
TERMINAL BLOCK
KMM-026A
WHITE
BROWON
YELLOW
GRAY
KMM-006A
MSTB0000006
UP BUTTON
ACRM0PCB008
PLAY FND
230V UK ONLY
MTIM0ELE001
36W
KMM-104~5A
36W
KMM-103A
MELE0BAL016
ELECTRONIC BALLAST
SMPS
MELE0SMP018(USA)
MELE0SMP008 (UK ONLY)
US ONLY
BILL ACEPTOR
OPSION
AC 120V
AC 120V
BILL SIGNAL
GND
WHITE 18AWG
BLACK 18AWG
GREEN
BLACK
KMM-003A
KMM-005A
YELLOW
GRAY
BLUE
GREEN
WHITE
BROWON
BLACK
BLACK
YELLOW
RED
KMM-020A
KMM-021A
POWER INPUT
POWER INPUT(+12V)
COIN SELECTOR
+12V
COIN SIGNAL
GND
MZZZ0COS013
KMM-002A
COIN SELECTOR
+12V
COIN SIGNAL
GND
MZZZ0COS013
B
A
KMM-001A
YELLOW
YELLOW
BLUE
GREEN
WHITE
GRAY
BLACK
BLACK
PIN No SIGNAL
1 +12V
2 +12V
3 COIN SIGNAL
4 BILL SIGNAL
5
6
7 GND
8 GND
PIN No SIGNAL
+12V
UP LAMP
LEFT SW
RIGHT SW
GND
GND
KMM-007A
KMM-018A
MZZZ0SPE004
SPEAKER 8Ω 40W
VOLUME
10KΩ
AMUN0PCB003
VOLUME
SPEAKER
IO BOARD INPUT
PCN10-64ACP-2.54DS
SETUP FND
COIN COUNTER
SETUP
SEVICE
ENTER
V/R
BILL COUNTER
TICKET COUNTER
CONTROL PANEL
UK ONLY
COIN SELECTOR
EXCEL CREDIT
BOARD
COIN METER
KMM-007A
ACRM0PCB001
MAIN BOARD
KMM-019A
VOLUME
MZZZ0COU002
YELLOW
BROWON
COIN METER
YELLOW
GRAY
PRIZE METER
BILL METER
SETUP&COUTER
PIN No SIGNAL
1 +12V
2 COIN METER
3 TICKET METER
4 TEST
5 SETUP
6 SERVICE
7
8 GND
9 GND
KMM-004A
YELLOW
BROWON
GRAY
WHITE
ORANGE
GREEN
BLUE
BLACK
ORANGE
GREEN
BLUE
BLACK
MELE0PUS001
SETUP
SERVICE
MELE0PUS002
ENTER
AALA0PCB004
SETUP FND
KMM-008A
B
KEY MASTER MINI WIRE DIAGRAM 1/1
KOMUSE CO.,LTD

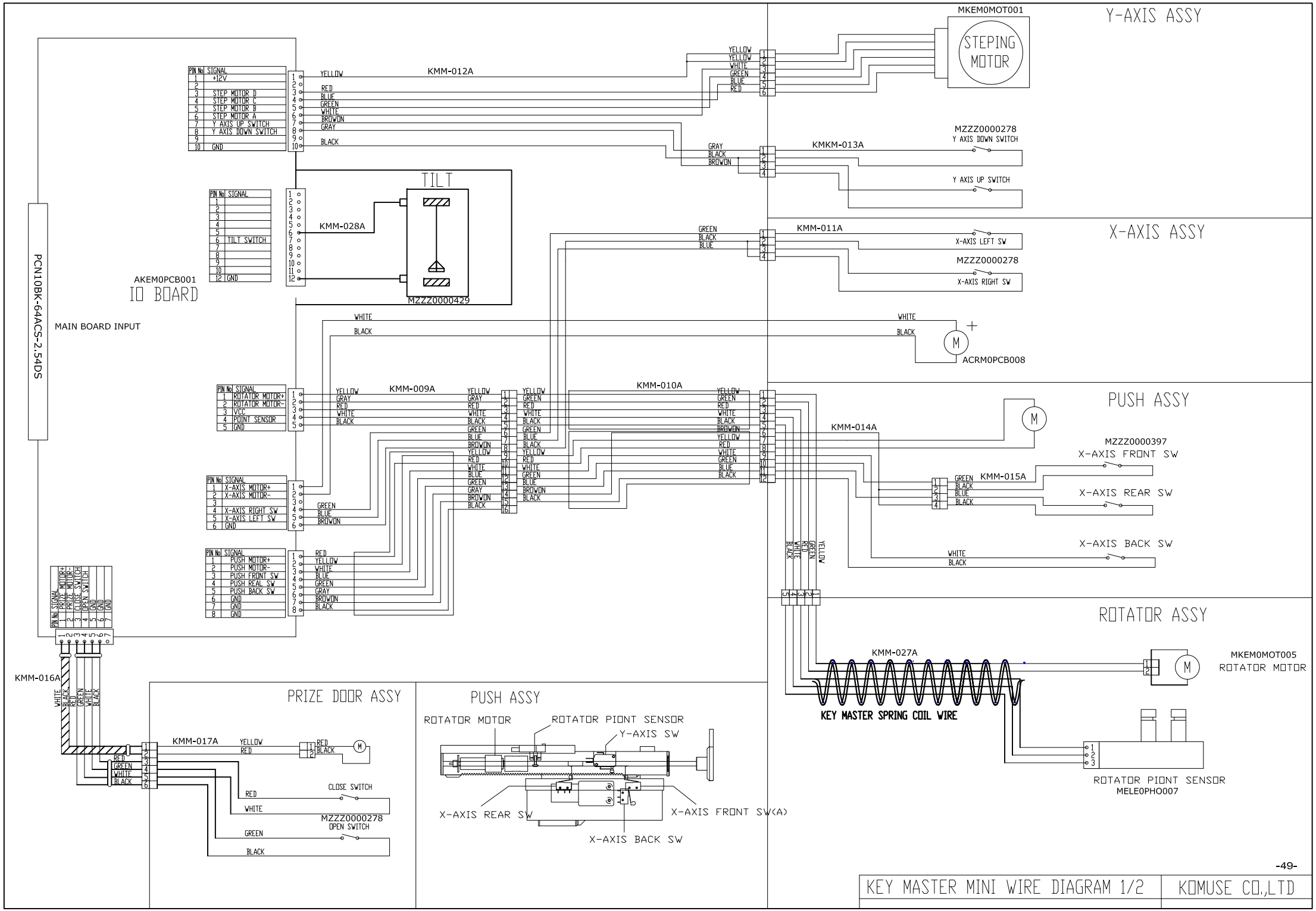
Y-AXIS ASSY
MKEM0MOT001
STEPING MOTOR
KMM-012A
MZZZ0000278
Y AXIS DOWN SWITCH
KMKM-013A
Y AXIS UP SWITCH
TILT
KMM-028A
MZZZ0000429
X-AXIS ASSY
KMM-011A
X-AXIS LEFT SW
MZZZ0000278
X-AXIS RIGHT SW
AKEM0PCB001
IO BOARD
PCN10BK-64ACS-2.54DS
MAIN BOARD INPUT
ACRM0PCB008
KMM-009A
KMM-010A
PUSH ASSY
KMM-014A
MZZZ0000397
X-AXIS FRONT SW
KMM-015A
X-AXIS REAR SW
X-AXIS BACK SW
ROTATOR ASSY
KMM-027A
MKEM0MOT005
ROTATOR MOTOR
KEY MASTER SPRING COIL WIRE
ROTATOR PIONT SENSOR
MELE0PHO007
KMM-016A
PRIZE DOOR ASSY
KMM-017A
CLOSE SWITCH
MZZZ0000278
OPEN SWITCH
PUSH ASSY
ROTATOR MOTOR
ROTATOR PIONT SENSOR
Y-AXIS SW
X-AXIS REAR SW
X-AXIS FRONT SW(A)
X-AXIS BACK SW
-49-
KEY MASTER MINI WIRE DIAGRAM 1/2
KOMUSE CO.,LTD

KEY MASTER MINI SHEET

2014.09.01	KEY MASTER MINI SHEET

	IMAGE	NAME	QUANTITY	METERIAL	CDDE NO.
1		BILLBOARD SHEET	1 EA	FILM SHEET	MKMMOSHE001
2		BUTTON ACRYL A	1 EA	ACRYL Silk screen	MKMMOSHE002
3		FRONT PRIZE OUT DOOR ACRYL	1 EA	ACRYL Silk screen	MKEMOSHE003
4		PRIZE SHOW CASE TOP ACRYL SILVER	3 EA	ACRYL SHEET	MKEMOSHE014
5		PRIZE SHOW CASE TOP ACRYL RED	3 EA	ACRYL SHEET	MKEMOSHE015
6		PRIZE SHOW CASE TOP ACRYL BLUE	3 EA	ACRYL SHEET	MKEMOSHE016
4		INSERT COIN SHEET	1 EA	SHEET Silk screen	MKMMOSHE003
5		HOW TO PLAY SHEET	1 EA	SHEET Silk screen	MKMMOSHE004
6	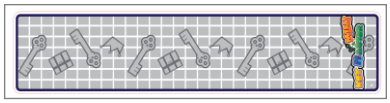	SIDE L SHEET	1 EA	SHEET Silk screen	MKMMOSHE005
7	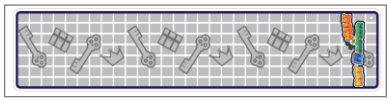	SIDE R SHEET	1 EA	SHEET Silk screen	MKMMOSHE006
8		FRONT SHEET	1 EA	SHEET Silk screen	MKMMOSHE007
9		OPERATOR NOTICE SHEET	1 EA	SHEET Silk screen	MKEMOSHE067
10		TIPS & NOTICE SHEET	1 EA	SHEET Silk screen	MKEMOSHE068
11		Z PUSH MAIN BOX SHEET	1 EA	SHEET Silk screen	MKEMOSHE006
12		RECYCLE MARK SHEET	1 EA	SHEET Silk screen	MGKMOSHE014
13		SEGA SHEET	1 EA	SHEET Silk screen	MKEMOSHE013

A4(210*297)